UNITED STATES PATENT AND TRADEMARK OFFICE

UNITED STATES DEPARTMENT OF COMMERCE
United States Patent and Trademark Office
Address: COMMISSIONER FOR PATENTS
P.O. Box 1450
Alexandria, Virginia 22313-1450
www.uspto.gov

APPLICATION NO.	ISSUE DATE	PATENT NO.	ATTORNEY DOCKET NO.	CONFIRMATION NO.
12/404,355	05/01/2012	8166929		1641

7590 04/11/2012

Manousos Pattakos
Lampraki 406
PC 18452 GR
Nikea Piraeus, 18452
GREECE

ISSUE NOTIFICATION

The projected patent number and issue date are specified above.

Determination of Patent Term Adjustment under 35 U.S.C. 154 (b)
(application filed on or after May 29, 2000)

The Patent Term Adjustment is 688 day(s). Any patent to issue from the above-identified application will include an indication of the adjustment on the front page.

If a Continued Prosecution Application (CPA) was filed in the above-identified application, the filing date that determines Patent Term Adjustment is the filing date of the most recent CPA.

Applicant will be able to obtain more detailed information by accessing the Patent Application Information Retrieval (PAIR) WEB site (http://pair.uspto.gov).

Any questions regarding the Patent Term Extension or Adjustment determination should be directed to the Office of Patent Legal Administration at (571)-272-7702. Questions relating to issue and publication fee payments should be directed to the Application Assistance Unit (AAU) of the Office of Data Management (ODM) at (571)-272-4200.

APPLICANT(s) (Please see PAIR WEB site http://pair.uspto.gov for additional applicants):

Manousos Pattakos, Nikea Piraeus, GREECE;
Chrysavgi Pattakou, Aharnai Athens, GREECE;
Emmanouel Pattakos, Nikea Piraeus, GREECE;

1/2

PART B - FEE(S) TRANSMITTAL

Complete and send this form, together with applicable fee(s), to: Mail Mail Stop ISSUE FEE
Commissioner for Patents
P.O. Box 1450
Alexandria, Virginia 22313-1450
or Fax (571)-273-2885

FEW

INSTRUCTIONS: This form should be used for transmitting the ISSUE FEE and PUBLICATION FEE (if required). Blocks 1 through 5 should be completed where appropriate. All further correspondence including the Patent, advance orders and notification of maintenance fees will be mailed to the current correspondence address as indicated unless corrected below or directed otherwise in Block 1, by (a) specifying a new correspondence address; and/or (b) indicating a separate "FEE ADDRESS" for maintenance fee notifications.

CURRENT CORRESPONDENCE ADDRESS (Note: Use Block 1 for any change of address)

7590 03/15/2012

Manousos Pattakos
Lampraki 406
PC 18452 GR
Nikea Piraeus, 18452
GREECE

OPAP MAR 2 1 2012 PATENT & TRADEMARK OFFICE

Note: A certificate of mailing can only be used for domestic mailings of the Fee(s) Transmittal. This certificate cannot be used for any other accompanying papers. Each additional paper, such as an assignment or formal drawing, must have its own certificate of mailing or transmission.

Certificate of Mailing or Transmission
I hereby certify that this Fee(s) Transmittal is being deposited with the United States Postal Service with sufficient postage for first class mail in an envelope addressed to the Mail Stop ISSUE FEE address above, or being facsimile transmitted to the USPTO (571) 273-2885, on the date indicated below.

(Depositor's name)
(Signature)
(Date)

APPLICATION NO.	FILING DATE	FIRST NAMED INVENTOR	ATTORNEY DOCKET NO.	CONFIRMATION NO.
12/404,355	03/16/2009	Manousos Pattakos		1641

T E OF INVENTION: VARIABLE COMPRESSION RATIO ENGINE

App.No. 12/404,355 "VARIABLE COMPRESSION RATIO ENGINE

APPLN. TYPE	SMALL ENTITY	ISSUE FEE DUE	PUBLICATION FEE DUE	PREV. PAID ISSUE FEE	TOTAL FEE(S) DUE	DATE DUE
nonprovisional	YES	$870	$300	$0	$1170	06/15/2012

EXAMINER	ART UNIT	CLASS-SUBCLASS
KAMEN, NOAH P	3783	123-0480AA

03/21/2012 MBLANCO1 00000023 12404355
01 FC:2501 870.00 OP
02 FC:1504 300.00 OP

1. Change of correspondence address or indication of "Fee Address" (37 CFR 1.363).
☐ Change of correspondence address (or Change of Correspondence Address form PTO/SB/122) attached.
☐ "Fee Address" indication (or "Fee Address" Indication form PTO/SB/47; Rev 03-02 or more recent) attached. **Use of a Customer Number is required.**

2. For printing on the patent front page, list
(1) the names of up to 3 registered patent attorneys or agents OR, alternatively,
(2) the name of a single firm (having as a member a registered attorney or agent) and the names of up to 2 registered patent attorneys or agents. If no name is listed, no name will be printed.
1 ____
2 ____
3 ____

3. ASSIGNEE NAME AND RESIDENCE DATA TO BE PRINTED ON THE PATENT (print or type)
PLEASE NOTE: Unless an assignee is identified below, no assignee data will appear on the patent. If an assignee is identified below, the document has been filed for recordation as set forth in 37 CFR 3.11. Completion of this form is NOT a substitute for filing an assignment.
(A) NAME OF ASSIGNEE (B) RESIDENCE: (CITY and STATE OR COUNTRY)

Please check the appropriate assignee category or categories (will not be printed on the patent): ☐ Individual ☐ Corporation or other private group entity ☐ Government

4a. The following fee(s) are submitted:
☒ Issue Fee
☒ Publication Fee (No small entity discount permitted)
☐ Advance Order - # of Copies

4b. Payment of Fee(s): **(Please first reapply any previously paid issue fee shown above)**
☐ A check is enclosed.
☒ Payment by credit card. Form PTO-2038 is attached.
☐ The Director is hereby authorized to charge the required fee(s), any deficiency, or credit any overpayment, to Deposit Account Number ____ (enclose an extra copy of this form).

5. **Change in Entity Status** (from status indicated above)
☐ a. Applicant claims SMALL ENTITY status. See 37 CFR 1.27. ☐ b. Applicant is no longer claiming SMALL ENTITY status. See 37 CFR 1.27(g)(2).

NOTE: The Issue Fee and Publication Fee (if required) will not be accepted from anyone other than the applicant; a registered attorney or agent; or the assignee or other party in interest as shown by the records of the United States Patent and Trademark Office.

Authorized Signature ____ Date March 21/2012

Typed or printed name Manousos Pattakos Registration No. ____

This collection of information is required by 37 CFR 1.311. The information is required to obtain or retain a benefit by the public which is to file (and by the USPTO to process) an application. Confidentiality is governed by 35 U.S.C. 122 and 37 CFR 1.14. This collection is estimated to take 12 minutes to complete, including gathering, preparing, and submitting the completed application form to the USPTO. Time will vary depending upon the individual case. Any comments on the amount of time you require to complete this form and/or suggestions for reducing this burden, should be sent to the Chief Information Officer, U.S. Patent and Trademark Office, U.S. Department of Commerce, P.O. Box 1450, Alexandria, Virginia 22313-1450. DO NOT SEND FEES OR COMPLETED FORMS TO THIS ADDRESS. SEND TO: Commissioner for Patents, P.O. Box 1450, Alexandria, Virginia 22313-1450.

Under the Paperwork Reduction Act of 1995, no persons are required to respond to a collection of information unless it displays a valid OMB control number.

1/2

PART B - FEE(S) TRANSMITTAL

Complete and send this form, together with applicable fee(s), to: Mail Mail Stop ISSUE FEE
Commissioner for Patents
P.O. Box 1450
Alexandria, Virginia 22313-1450
or Fax (571)-273-2885

INSTRUCTIONS: This form should be used for transmitting the ISSUE FEE and PUBLICATION FEE (if required). Blocks 1 through 5 should be completed where appropriate. All further correspondence including the Patent, advance orders and notification of maintenance fees will be mailed to the current correspondence address as indicated unless corrected below or directed otherwise in Block 1, by (a) specifying a new correspondence address; and/or (b) indicating a separate "FEE ADDRESS" for maintenance fee notifications.

CURRENT CORRESPONDENCE ADDRESS (Note: Use Block 1 for any change of address)

7590 03/15/2012

Manousos Pattakos
Lampraki 406
PC 18452 GR
Nikea Piraeus, 18452
GREECE

OPAP IAPS MAR 2 1 2012 PATENT & TRADEMARK OFFICE

Note: A certificate of mailing can only be used for domestic mailings of the Fee(s) Transmittal. This certificate cannot be used for any other accompanying papers. Each additional paper, such as an assignment or formal drawing, must have its own certificate of mailing or transmission.

Certificate of Mailing or Transmission
I hereby certify that this Fee(s) Transmittal is being deposited with the United States Postal Service with sufficient postage for first class mail in an envelope addressed to the Mail Stop ISSUE FEE address above, or being facsimile transmitted to the USPTO (571) 273-2885, on the date indicated below.

(Depositor's name)
(Signature)
(Date)

APPLICATION NO.	FILING DATE	FIRST NAMED INVENTOR	ATTORNEY DOCKET NO.	CONFIRMATION NO.
12/404,355	03/16/2009	Manousos Pattakos		1641

T' E OF INVENTION: VARIABLE COMPRESSION RATIO ENGINE

App.No. 12/404,355 "VARIABLE COMPRESSION RATIO ENGINE

APPLN. TYPE	SMALL ENTITY	ISSUE FEE DUE	PUBLICATION FEE DUE	PREV. PAID ISSUE FEE	TOTAL FEE(S) DUE	DATE DUE
nonprovisional	YES	$870	$300	$0	$1170	06/15/2012

EXAMINER	ART UNIT	CLASS-SUBCLASS
KAMEN, NOAH P	3783	123-0480AA

1. Change of correspondence address or indication of "Fee Address" (37 CFR 1.363).
☐ Change of correspondence address (or Change of Correspondence Address form PTO/SB/122) attached.
☐ "Fee Address" indication (or "Fee Address" Indication form PTO/SB/47; Rev 03-02 or more recent) attached. **Use of a Customer Number is required.**

2. For printing on the patent front page, list
(1) the names of up to 3 registered patent attorneys or agents OR, alternatively,
(2) the name of a single firm (having as a member a registered attorney or agent) and the names of up to 2 registered patent attorneys or agents. If no name is listed, no name will be printed.
1 ____
2 ____
3 ____

3. ASSIGNEE NAME AND RESIDENCE DATA TO BE PRINTED ON THE PATENT (print or type)
PLEASE NOTE: Unless an assignee is identified below, no assignee data will appear on the patent. If an assignee is identified below, the document has been filed for recordation as set forth in 37 CFR 3.11. Completion of this form is NOT a substitute for filing an assignment.
(A) NAME OF ASSIGNEE (B) RESIDENCE: (CITY and STATE OR COUNTRY)

Please check the appropriate assignee category or categories (will not be printed on the patent): ☐ Individual ☐ Corporation or other private group entity ☐ Government

4a. The following fee(s) are submitted:
☒ Issue Fee
☒ Publication Fee (No small entity discount permitted)
☐ Advance Order - # of Copies ____

4b. Payment of Fee(s): **(Please first reapply any previously paid issue fee shown above)**
☐ A check is enclosed.
☒ Payment by credit card. Form PTO-2038 is attached.
☐ The Director is hereby authorized to charge the required fee(s), any deficiency, or credit any overpayment, to Deposit Account Number ____ (enclose an extra copy of this form).

5. **Change in Entity Status** (from status indicated above)
☐ a. Applicant claims SMALL ENTITY status. See 37 CFR 1.27. ☐ b. Applicant is no longer claiming SMALL ENTITY status. See 37 CFR 1.27(g)(2).

NOTE: The Issue Fee and Publication Fee (if required) will not be accepted from anyone other than the applicant; a registered attorney or agent; or the assignee or other party in interest as shown by the records of the United States Patent and Trademark Office.

Authorized Signature ____ Date March 21/2012

Typed or printed name Manousos Pattakos Registration No. ____

This collection of information is required by 37 CFR 1.311. The information is required to obtain or retain a benefit by the public which is to file (and by the USPTO to process) an application. Confidentiality is governed by 35 U.S.C. 122 and 37 CFR 1.14. This collection is estimated to take 12 minutes to complete, including gathering, preparing, and submitting the completed application form to the USPTO. Time will vary depending upon the individual case. Any comments on the amount of time you require to complete this form and/or suggestions for reducing this burden, should be sent to the Chief Information Officer, U.S. Patent and Trademark Office, U.S. Department of Commerce, P.O. Box 1450, Alexandria, Virginia 22313-1450. DO NOT SEND FEES OR COMPLETED FORMS TO THIS ADDRESS. SEND TO: Commissioner for Patents, P.O. Box 1450, Alexandria, Virginia 22313-1450.

Under the Paperwork Reduction Act of 1995, no persons are required to respond to a collection of information unless it displays a valid OMB control number.

UNITED STATES PATENT AND TRADEMARK OFFICE

UNITED STATES DEPARTMENT OF COMMERCE
United States Patent and Trademark Office
Address: COMMISSIONER FOR PATENTS
P.O. Box 1450
Alexandria, Virginia 22313-1450
www.uspto.gov

NOTICE OF ALLOWANCE AND FEE(S) DUE

7590 03/15/2012

Manousos Pattakos
Lampraki 406
PC 18452 GR
Nikea Piraeus, 18452
GREECE

EXAMINER
KAMEN, NOAH P

ART UNIT	PAPER NUMBER
3783	

DATE MAILED: 03/15/2012

APPLICATION NO.	FILING DATE	FIRST NAMED INVENTOR	ATTORNEY DOCKET NO.	CONFIRMATION NO.
12/404,355	03/16/2009	Manousos Pattakos		1641

TITLE OF INVENTION: VARIABLE COMPRESSION RATIO ENGINE

APPLN. TYPE	SMALL ENTITY	ISSUE FEE DUE	PUBLICATION FEE DUE	PREV. PAID ISSUE FEE	TOTAL FEE(S) DUE	DATE DUE
nonprovisional	YES	$870	$300	$0	$1170	06/15/2012

THE APPLICATION IDENTIFIED ABOVE HAS BEEN EXAMINED AND IS ALLOWED FOR ISSUANCE AS A PATENT. PROSECUTION ON THE MERITS IS CLOSED. THIS NOTICE OF ALLOWANCE IS NOT A GRANT OF PATENT RIGHTS. THIS APPLICATION IS SUBJECT TO WITHDRAWAL FROM ISSUE AT THE INITIATIVE OF THE OFFICE OR UPON PETITION BY THE APPLICANT. SEE 37 CFR 1.313 AND MPEP 1308.

THE ISSUE FEE AND PUBLICATION FEE (IF REQUIRED) MUST BE PAID WITHIN THREE MONTHS FROM THE MAILING DATE OF THIS NOTICE OR THIS APPLICATION SHALL BE REGARDED AS ABANDONED. THIS STATUTORY PERIOD CANNOT BE EXTENDED. SEE 35 U.S.C. 151. THE ISSUE FEE DUE INDICATED ABOVE DOES NOT REFLECT A CREDIT FOR ANY PREVIOUSLY PAID ISSUE FEE IN THIS APPLICATION. IF AN ISSUE FEE HAS PREVIOUSLY BEEN PAID IN THIS APPLICATION (AS SHOWN ABOVE), THE RETURN OF PART B OF THIS FORM WILL BE CONSIDERED A REQUEST TO REAPPLY THE PREVIOUSLY PAID ISSUE FEE TOWARD THE ISSUE FEE NOW DUE.

HOW TO REPLY TO THIS NOTICE:

I. Review the SMALL ENTITY status shown above.

If the SMALL ENTITY is shown as YES, verify your current SMALL ENTITY status:

A. If the status is the same, pay the TOTAL FEE(S) DUE shown above.

B. If the status above is to be removed, check box 5b on Part B - Fee(s) Transmittal and pay the PUBLICATION FEE (if required) and twice the amount of the ISSUE FEE shown above, or

If the SMALL ENTITY is shown as NO:

A. Pay TOTAL FEE(S) DUE shown above, or

B. If applicant claimed SMALL ENTITY status before, or is now claiming SMALL ENTITY status, check box 5a on Part B - Fee(s) Transmittal and pay the PUBLICATION FEE (if required) and 1/2 the ISSUE FEE shown above.

II. PART B - FEE(S) TRANSMITTAL, or its equivalent, must be completed and returned to the United States Patent and Trademark Office (USPTO) with your ISSUE FEE and PUBLICATION FEE (if required). If you are charging the fee(s) to your deposit account, section "4b" of Part B - Fee(s) Transmittal should be completed and an extra copy of the form should be submitted. If an equivalent of Part B is filed, a request to reapply a previously paid issue fee must be clearly made, and delays in processing may occur due to the difficulty in recognizing the paper as an equivalent of Part B.

III. All communications regarding this application must give the application number. Please direct all communications prior to issuance to Mail Stop ISSUE FEE unless advised to the contrary.

IMPORTANT REMINDER: Utility patents issuing on applications filed on or after Dec. 12, 1980 may require payment of maintenance fees. It is patentee's responsibility to ensure timely payment of maintenance fees when due.

PART B - FEE(S) TRANSMITTAL

Complete and send this form, together with applicable fee(s), to: Mail **Mail Stop ISSUE FEE**
Commissioner for Patents
P.O. Box 1450
Alexandria, Virginia 22313-1450
or Fax (571)-273-2885

INSTRUCTIONS: This form should be used for transmitting the ISSUE FEE and PUBLICATION FEE (if required). Blocks 1 through 5 should be completed where appropriate. All further correspondence including the Patent, advance orders and notification of maintenance fees will be mailed to the current correspondence address as indicated unless corrected below or directed otherwise in Block 1, by (a) specifying a new correspondence address; and/or (b) indicating a separate "FEE ADDRESS" for maintenance fee notifications.

CURRENT CORRESPONDENCE ADDRESS (Note: Use Block 1 for any change of address)

7590 03/15/2012

Manousos Pattakos
Lampraki 406
PC 18452 GR
Nikea Piraeus, 18452
GREECE

Note: A certificate of mailing can only be used for domestic mailings of the Fee(s) Transmittal. This certificate cannot be used for any other accompanying papers. Each additional paper, such as an assignment or formal drawing, must have its own certificate of mailing or transmission.

Certificate of Mailing or Transmission

I hereby certify that this Fee(s) Transmittal is being deposited with the United States Postal Service with sufficient postage for first class mail in an envelope addressed to the Mail Stop ISSUE FEE address above, or being facsimile transmitted to the USPTO (571) 273-2885, on the date indicated below.

(Depositor's name)

(Signature)

(Date)

APPLICATION NO.	FILING DATE	FIRST NAMED INVENTOR	ATTORNEY DOCKET NO.	CONFIRMATION NO.
12/404,355	03/16/2009	Manousos Pattakos		1641

TITLE OF INVENTION: VARIABLE COMPRESSION RATIO ENGINE

APPLN. TYPE	SMALL ENTITY	ISSUE FEE DUE	PUBLICATION FEE DUE	PREV. PAID ISSUE FEE	TOTAL FEE(S) DUE	DATE DUE
nonprovisional	YES	$870	$300	$0	$1170	06/15/2012

EXAMINER	ART UNIT	CLASS-SUBCLASS
KAMEN, NOAH P	3783	123-0480AA

1. Change of correspondence address or indication of "Fee Address" (37 CFR 1.363).

❑ Change of correspondence address (or Change of Correspondence Address form PTO/SB/122) attached.

❑ "Fee Address" indication (or "Fee Address" Indication form PTO/SB/47; Rev 03-02 or more recent) attached. **Use of a Customer Number is required.**

2. For printing on the patent front page, list

(1) the names of up to 3 registered patent attorneys or agents OR, alternatively,

(2) the name of a single firm (having as a member a registered attorney or agent) and the names of up to 2 registered patent attorneys or agents. If no name is listed, no name will be printed.

1_____

2_____

3_____

3. ASSIGNEE NAME AND RESIDENCE DATA TO BE PRINTED ON THE PATENT (print or type)

PLEASE NOTE: Unless an assignee is identified below, no assignee data will appear on the patent. If an assignee is identified below, the document has been filed for recordation as set forth in 37 CFR 3.11. Completion of this form is NOT a substitute for filing an assignment.

(A) NAME OF ASSIGNEE (B) RESIDENCE: (CITY and STATE OR COUNTRY)

Please check the appropriate assignee category or categories (will not be printed on the patent) : ❑ Individual ❑ Corporation or other private group entity ❑ Government

4a. The following fee(s) are submitted:

❑ Issue Fee

❑ Publication Fee (No small entity discount permitted)

❑ Advance Order - # of Copies _____

4b. Payment of Fee(s): (**Please first reapply any previously paid issue fee shown above**)

❑ A check is enclosed.

❑ Payment by credit card. Form PTO-2038 is attached.

❑ The Director is hereby authorized to charge the required fee(s), any deficiency, or credit any overpayment, to Deposit Account Number _____ (enclose an extra copy of this form).

5. **Change in Entity Status** (from status indicated above)

❑ a. Applicant claims SMALL ENTITY status. See 37 CFR 1.27.

❑ b. Applicant is no longer claiming SMALL ENTITY status. See 37 CFR 1.27(g)(2).

NOTE: The Issue Fee and Publication Fee (if required) will not be accepted from anyone other than the applicant; a registered attorney or agent; or the assignee or other party in interest as shown by the records of the United States Patent and Trademark Office.

Authorized Signature _____ Date _____

Typed or printed name _____ Registration No. _____

UNITED STATES PATENT AND TRADEMARK OFFICE

UNITED STATES DEPARTMENT OF COMMERCE
United States Patent and Trademark Office
Address: COMMISSIONER FOR PATENTS
P.O. Box 1450
Alexandria, Virginia 22313-1450
www.uspto.gov

APPLICATION NO.	FILING DATE	FIRST NAMED INVENTOR	ATTORNEY DOCKET NO.	CONFIRMATION NO.
12/404,355	03/16/2009	Manousos Pattakos		1641

7590 03/15/2012

Manousos Pattakos
Lampraki 406
PC 18452 GR
Nikea Piraeus, 18452
GREECE

EXAMINER
KAMEN, NOAH P

ART UNIT	PAPER NUMBER
3783	

DATE MAILED: 03/15/2012

Determination of Patent Term Adjustment under 35 U.S.C. 154 (b)
(application filed on or after May 29, 2000)

The Patent Term Adjustment to date is 642 day(s). If the issue fee is paid on the date that is three months after the mailing date of this notice and the patent issues on the Tuesday before the date that is 28 weeks (six and a half months) after the mailing date of this notice, the Patent Term Adjustment will be 642 day(s).

If a Continued Prosecution Application (CPA) was filed in the above-identified application, the filing date that determines Patent Term Adjustment is the filing date of the most recent CPA.

Applicant will be able to obtain more detailed information by accessing the Patent Application Information Retrieval (PAIR) WEB site (http://pair.uspto.gov).

Any questions regarding the Patent Term Extension or Adjustment determination should be directed to the Office of Patent Legal Administration at (571)-272-7702. Questions relating to issue and publication fee payments should be directed to the Customer Service Center of the Office of Patent Publication at 1-(888)-786-0101 or (571)-272-4200.

Privacy Act Statement

The Privacy Act of 1974 (P.L. 93-579) requires that you be given certain information in connection with your submission of the attached form related to a patent application or patent. Accordingly, pursuant to the requirements of the Act, please be advised that: (1) the general authority for the collection of this information is 35 U.S.C. 2(b)(2); (2) furnishing of the information solicited is voluntary; and (3) the principal purpose for which the information is used by the U.S. Patent and Trademark Office is to process and/or examine your submission related to a patent application or patent. If you do not furnish the requested information, the U.S. Patent and Trademark Office may not be able to process and/or examine your submission, which may result in termination of proceedings or abandonment of the application or expiration of the patent.

The information provided by you in this form will be subject to the following routine uses:

1. The information on this form will be treated confidentially to the extent allowed under the Freedom of Information Act (5 U.S.C. 552) and the Privacy Act (5 U.S.C 552a). Records from this system of records may be disclosed to the Department of Justice to determine whether disclosure of these records is required by the Freedom of Information Act.
2. A record from this system of records may be disclosed, as a routine use, in the course of presenting evidence to a court, magistrate, or administrative tribunal, including disclosures to opposing counsel in the course of settlement negotiations.
3. A record in this system of records may be disclosed, as a routine use, to a Member of Congress submitting a request involving an individual, to whom the record pertains, when the individual has requested assistance from the Member with respect to the subject matter of the record.
4. A record in this system of records may be disclosed, as a routine use, to a contractor of the Agency having need for the information in order to perform a contract. Recipients of information shall be required to comply with the requirements of the Privacy Act of 1974, as amended, pursuant to 5 U.S.C. 552a(m).
5. A record related to an International Application filed under the Patent Cooperation Treaty in this system of records may be disclosed, as a routine use, to the International Bureau of the World Intellectual Property Organization, pursuant to the Patent Cooperation Treaty.
6. A record in this system of records may be disclosed, as a routine use, to another federal agency for purposes of National Security review (35 U.S.C. 181) and for review pursuant to the Atomic Energy Act (42 U.S.C. 218(c)).
7. A record from this system of records may be disclosed, as a routine use, to the Administrator, General Services, or his/her designee, during an inspection of records conducted by GSA as part of that agency's responsibility to recommend improvements in records management practices and programs, under authority of 44 U.S.C. 2904 and 2906. Such disclosure shall be made in accordance with the GSA regulations governing inspection of records for this purpose, and any other relevant (i.e., GSA or Commerce) directive. Such disclosure shall not be used to make determinations about individuals.
8. A record from this system of records may be disclosed, as a routine use, to the public after either publication of the application pursuant to 35 U.S.C. 122(b) or issuance of a patent pursuant to 35 U.S.C. 151. Further, a record may be disclosed, subject to the limitations of 37 CFR 1.14, as a routine use, to the public if the record was filed in an application which became abandoned or in which the proceedings were terminated and which application is referenced by either a published application, an application open to public inspection or an issued patent.
9. A record from this system of records may be disclosed, as a routine use, to a Federal, State, or local law enforcement agency, if the USPTO becomes aware of a violation or potential violation of law or regulation.

Notice of Allowability	Application No.	Applicant(s)	
	12/404,355	PATTAKOS ET AL.	
	Examiner	Art Unit	
	NOAH KAMEN	3783	

-- The MAILING DATE of this communication appears on the cover sheet with the correspondence address--

All claims being allowable, PROSECUTION ON THE MERITS IS (OR REMAINS) CLOSED in this application. If not included herewith (or previously mailed), a Notice of Allowance (PTOL-85) or other appropriate communication will be mailed in due course. **THIS NOTICE OF ALLOWABILITY IS NOT A GRANT OF PATENT RIGHTS.** This application is subject to withdrawal from issue at the initiative of the Office or upon petition by the applicant. See 37 CFR 1.313 and MPEP 1308.

1. ☒ This communication is responsive to *the amendment filed 2/22/12*.

2. ☐ An election was made by the applicant in response to a restriction requirement set forth during the interview on _____; the restriction requirement and election have been incorporated into this action.

3. ☐ The allowed claim(s) is/are *1-10*.

4. ☐ Acknowledgment is made of a claim for foreign priority under 35 U.S.C. § 119(a)-(d) or (f).
   a) ☐ All b) ☐ Some* c) ☐ None of the:
      1. ☐ Certified copies of the priority documents have been received.
      2. ☐ Certified copies of the priority documents have been received in Application No. _____ .
      3. ☐ Copies of the certified copies of the priority documents have been received in this national stage application from the International Bureau (PCT Rule 17.2(a)).

   * Certified copies not received: _____.

Applicant has THREE MONTHS FROM THE "MAILING DATE" of this communication to file a reply complying with the requirements noted below. Failure to timely comply will result in ABANDONMENT of this application.
THIS THREE-MONTH PERIOD IS NOT EXTENDABLE.

5. ☐ A SUBSTITUTE OATH OR DECLARATION must be submitted. Note the attached EXAMINER'S AMENDMENT or NOTICE OF INFORMAL PATENT APPLICATION (PTO-152) which gives reason(s) why the oath or declaration is deficient.

6. ☐ CORRECTED DRAWINGS (as "replacement sheets") must be submitted.
   (a) ☐ including changes required by the Notice of Draftsperson's Patent Drawing Review (PTO-948) attached
      1) ☐ hereto or 2) ☐ to Paper No./Mail Date _____.
   (b) ☐ including changes required by the attached Examiner's Amendment / Comment or in the Office action of Paper No./Mail Date _____.

   Identifying indicia such as the application number (see 37 CFR 1.84(c)) should be written on the drawings in the front (not the back) of each sheet. Replacement sheet(s) should be labeled as such in the header according to 37 CFR 1.121(d).

7. ☐ DEPOSIT OF and/or INFORMATION about the deposit of BIOLOGICAL MATERIAL must be submitted. Note the attached Examiner's comment regarding REQUIREMENT FOR THE DEPOSIT OF BIOLOGICAL MATERIAL.

Attachment(s)

1. ☐ Notice of References Cited (PTO-892)
2. ☐ Notice of Draftperson's Patent Drawing Review (PTO-948)
3. ☐ Information Disclosure Statements (PTO/SB/08), Paper No./Mail Date _____
4. ☐ Examiner's Comment Regarding Requirement for Deposit of Biological Material
5. ☐ Notice of Informal Patent Application
6. ☐ Interview Summary (PTO-413), Paper No./Mail Date _____ .
7. ☐ Examiner's Amendment/Comment
8. ☐ Examiner's Statement of Reasons for Allowance
9. ☐ Other _____.

/Noah Kamen/
Primary Examiner, Art Unit 3783

Issue Classification

Application/Control No.	Applicant(s)/Patent Under Reexamination
12404355	PATTAKOS ET AL.
Examiner	**Art Unit**
NOAH KAMEN	3783

ORIGINAL		INTERNATIONAL CLASSIFICATION										
CLASS	SUBCLASS	CLAIMED					NON-CLAIMED					
123	48C	F	0	2	B	75 / 04 ()						

CROSS REFERENCE(S)

CLASS	SUBCLASS (ONE SUBCLASS PER BLOCK)				
123	78C				

☒ Claims renumbered in the same order as presented by applicant ☐ CPA ☐ T.D. ☐ R.1.47

Final	Original	Final	Original	Final	Original	Final	Original	Final	Original	Final	Original	Final	Original	Final	Original

NONE (Assistant Examiner)	(Date)	Total Claims Allowed: 10	
/NOAH KAMEN/ Primary Examiner.Art Unit 3783 (Primary Examiner)	02/29/2012 (Date)	O.G. Print Claim(s) 1	O.G. Print Figure 1

UNITED STATES PATENT AND TRADEMARK OFFICE

UNITED STATES DEPARTMENT OF COMMERCE
United States Patent and Trademark Office
Address: COMMISSIONER FOR PATENTS
P.O. Box 1450
Alexandria, Virginia 22313-1450
www.uspto.gov

BIB DATA SHEET

CONFIRMATION NO. 1641

SERIAL NUMBER	FILING or 371(c) DATE	CLASS	GROUP ART UNIT	ATTORNEY DOCKET NO.
12/404,355	03/16/2009 **RULE**	123	3783	

APPLICANTS

Manousos Pattakos, Nikea Piraeus, GREECE;
Chrysavgi Pattakou, Aharnai Athens, GREECE;
Emmanouel Pattakos, Nikea Piraeus, GREECE;

**** CONTINUING DATA ***************************

**** FOREIGN APPLICATIONS ***************************

**** IF REQUIRED, FOREIGN FILING LICENSE GRANTED **** ** SMALL ENTITY **
03/27/2009

Foreign Priority claimed ☐ Yes ☑ No 35 USC 119(a-d) conditions met ☐ Yes ☑ No Verified and Acknowledged /NOAH P KAMEN/ Examiner's Signature	☐ Met after Allowance Initials	STATE OR COUNTRY	SHEETS DRAWINGS	TOTAL CLAIMS	INDEPENDENT CLAIMS
		GREECE	14	10	3

ADDRESS

Manousos Pattakos
Lampraki 406
PC 18452 GR
Nikea Piraeus, 18452
GREECE

TITLE

VARIABLE COMPRESSION RATIO ENGINE

FILING FEE RECEIVED		
462	FEES: Authority has been given in Paper No._____ to charge/credit DEPOSIT ACCOUNT No._____ for following:	☐ All Fees ☐ 1.16 Fees (Filing) ☐ 1.17 Fees (Processing Ext. of time) ☐ 1.18 Fees (Issue) ☐ Other _____ ☐ Credit

EAST Search History

EAST Search History (Prior Art)

<This search history is empty>

EAST Search History (Interference)

Ref #	Hits	Search Query	DBs	Default Operator	Plurals	Time Stamp
L1	2	(compression and ratio and slid$4 and cylinder and piston and eccentric$9 and rod and head).clm.	USPAT; UPAD	OR	ON	2012/02/29 09:10

2/29/2012 9:11:04 AM
C:\Documents and Settings\NKamen\My Documents\EAST\Workspaces\default51811.wsp

Search Notes	Application/Control No.	Applicant(s)/Patent Under Reexamination
	12404355	PATTAKOS ET AL.
	Examiner	**Art Unit**
	NOAH KAMEN	3783

SEARCHED

Class	Subclass	Date	Examiner
123	48R, 48C	8/31/2011	NK
	78R, 78C		
search updated		2/29/2012	NK

SEARCH NOTES

Search Notes	Date	Examiner
EAST	8/31/2011	NK
EAST	2/29/2012	NK

INTERFERENCE SEARCH

Class	Subclass	Date	Examiner
see	EAST	8/31/2011	NK
see	EAST	2/29/2012	NK

RECEIVED
CENTRAL FAX CENTER
FEB 2 2 2012

1/22

February 22, 2012

Application: **12/404,355**
Title: **VARIABLE COMPRESSION RATIO ENGINE**
Applicant: PATTAKOS Manousos et al.
Examiner: Noah Kamen
Art unit: 3783

To the **USPTO**
Mr Noah Kamen, primary examiner

This is the response to your letter:
"Office Action Summary", mailed on 02/17/2012.

According your instructions:

Drawings
The drawings without numbered elements (Figures 1, 3, 4, 6, 7, 10, 11, 12, 14 and 15) are amended to include numbered elements.

Specification

- "Sectional headings" are added.
- The use of "means", like "slider means" or "connecting means", is not used in the amended specification.
- A few grammatical/editorial corrections have been applied.
- The amended specification contains no new matter.

Attached documents:
The amended drawings.
The amended specification with the corrections.
The "clean copy" of the amended specification.

Thank you
Manousos Pattakos
1st applicant and inventor

RECEIVED
CENTRAL FAX CENTER

FEB 2 2 2012

February 22, 2012

Application: **12/404,355**
Title: **VARIABLE COMPRESSION RATIO ENGINE**
Applicant: PATTAKOS Manousos et al.
Examiner: Noah Kamen
Art unit: 3783

To the **USPTO**
Mr Noah Kamen, primary examiner

This is the response to your letter:
"Office Action Summary", mailed on 02/17/2012.

According your instructions:

Drawings
The drawings without numbered elements (Figures 1, 3, 4, 6, 7, 10, 11, 12, 14 and 15) are amended to include numbered elements.

Specification

- "Sectional headings" are added.
- The use of "means", like "slider means" or "connecting means", is not used in the amended specification.
- A few grammatical/editorial corrections have been applied.
- The amended specification contains no new matter.

Attached documents:
The amended drawings.
The amended specification with the corrections.
The "clean copy" of the amended specification.

Thank you
Manousos Pattakos
1st applicant and inventor

RECEIVED
CENTRAL FAX CENTER
FEB 2 2 2012

TITLE OF THE INVENTION.

VARIABLE COMPRESSION RATIO ENGINE

BACKGROUND OF THE INVENTION

In the prior art, like SAAB's PCT/SE91/818 and Toyota's US7,047,917, a pair of connecting shafts is arranged at the two sides of the cylinder block, laterally, to connect the upper and lower sections of the engine. The rotation of a control shaft displaces the cylinder head relative to the crankcase to vary the compression ratio. The inevitable long distance between the two connecting shafts generates heavy bending loads, flexing and noise, making the reinforcement of the two sections inevitable.

BRIEF SUMMARY OF THE INVENTION

In this patent, a variable compression ratio internal combustion engine comprises a base section and a movable section slidably fitted to each other.

The movable section comprises a cylinder head and a cylinder block.

The base section comprises a crankcase, or a casing in general. There are projections of the crankcase into the cylinder head to provide supports for receiving the forces applied to the cylinder head from the high-pressure gas into the combustion chamber. These projections comprise pillars starting near the crankshaft base bearings and entering, through proper openings, into the cylinder head, they also comprise bridges firmly interconnecting the free ends of the pillars to strengthen the structure and to provide supports to a control shaft.

In the conventional cylinder block the narrowing between neighboring cylinders is an available free area for the pillars. Bearing the cylinder head, the pillars are loaded purely in tension and connect, as directly as desirable, the tightening screws of the crankshaft bearing caps to the tightening screws of the bridges. Limited to the bridges, the bending loads are no heavier than those in the crankshaft bearing caps, i.e. there is nothing special regarding the size or the design of the bridges.

The control shaft has eccentric pins or cams or toothed gears etc. The crankcase bears the control shaft and the control shaft bears the cylinder head, longitudinally.

The architecture of the crankcase projections fits the direction of the gas pressure forces on the cylinder head, resulting in pure tensile loading of the pillars.

There are sliders on the cylinder block, at the height where the piston skirts thrust the cylinder walls. These sliders thrust on respective crankcase sliders in order to pass the thrust loads of the cylinder block onto the crankcase. These loads are several times weaker than those on the cylinder head. The pillars of the crankcase projections can serve as the crankcase sliders, too. The bridging of the free ends of the pillars and the small distance of the thrust loads from the crankcase side of the pillars improve the thrust load capacity of the structure.

The cylinder block, being free from transferring to the crankcase the forces applied on the cylinder head, becomes lighter and distortion free. The forces tending to separate the cylinder head from the cylinder are small enabling the reliable sealing of the combustion chamber. The union of the cylinder head with the cylinder block in a single piece is a further option, better as regards

the cooling, the simplicity, the robustness, the cost and the reliability.

The control shaft is pivotally mounted either on the cylinder head or on the crankcase projections. The control shaft supported on the crankcase projections directly, or by connecting rods sliders and the likes, receives the forces applied on the cylinder head and supports the cylinder head. The angular displacement of the control shaft varies the compression ratio by displacing the cylinder head relative to the crankshaft.

BRIEF DESCRIPTION OF THE SEVERAL VIEWS OF THE DRAWING(S).

Figs 1 to 9 show a first embodiment.

Fig 1 shows the engine partly sliced.

Fig 2 shows the base section and the movable section separated, with the control shaft between them.

Fig 3 shows the movable section disassembled and the bearings for mounting the control shaft.

Fig 4 shows the control shaft and the bridges of the pillars.

Fig 5 shows the crankcase, the projections of the crankcase and the parts for the connection of the crankcase to the control shaft.

Fig 6 shows the control shaft, the lower bearings of the crankshaft, the bridges of the pillars and the straight way for passing the loads.

Fig 7 shows the robust, yet compact and light, structure of the crankcase.

Fig 8 shows sections of the engine.

Fig 9 shows the section D-D of Fig 8 exploded.

Figs 10 to 13 show a second embodiment.

Fig 10 shows the engine partly sliced, a bearing cup from the other side, the timing belt and the sprockets.
Fig 11 shows the crankshaft, the connecting rods and the pistons of the engine, the control shaft, the bridges and the direct passing of the loads from the cylinder head, through the pillars, to the lower bearings of the crankshaft.
Fig 12 shows at top the bridges and the control shaft, at middle the cylinder head and at bottom the crankcase with its pillars.
Fig 13 shows details of the control shaft, the bridges, the sliders and the roller bearings.
Fig 14 shows a variation of the second embodiment.
Fig 15 shows another variation of the second embodiment.

DETAILED DESCRIPTION OF THE INVENTION.

In a first embodiment, on top of the cylinder head 9 of the movable section 7, a control shaft 13 is pivotally mounted in the space between the two camshafts, leaving space for a centrally located spark in the combustion chamber 12.
The crankcase 2, of the base section 1, has projections 6 comprising pillars and bridges.
The control shaft has eccentric pins 14.
The connecting rods 15 are pivotally mounted at one end on said eccentric pins 14 and at the other end on the crankcase projections 6.
The movable section 7 is slidably fitted on the crankcase 2 by means of the cylinder sliders 10 and the crankcase sliders 5. The thrust loads of the cylinders pass through the cylinder sliders 10 to the crankcase 2.

The angular displacement of the control shaft displaces the cylinder head, relative to the crankshaft, varying the compression ratio. The control shaft receives the forces applied to the cylinder head and passes them, through the connecting rods 15, to the bridges, then to the pillars and finally to the lower crankcase. Compared to the gas pressure force carried by the connecting rod to the crankshaft 4, each pillar carries less than a quarter and each short connecting rod 15 carries less than half.

In a second embodiment, the control shaft 13 is pivotally mounted on the cylinder head by means of needle roller bearings and has eccentric pins 14. First sliders 16 are pivotally mounted on the eccentric pins 14, they are also slidably fitted into second sliders 17 formed in the bridges of the free ends of the pillars. The angular displacement of the control shaft 13 displaces the cylinder head 9 relative to the crankcase varying the compression ratio. All heavy loaded pivot joints and sliders can be of the needle roller bearing type to avoid lubrication issues.

The geometry of the arrangement of the timing belt shown in Fig 10 can keep substantially unchanged the timing between the crankshaft and the camshafts. The roller just below the two camshaft sprockets has a shaft secured on the base section. The other roller, near the crankshaft, keeps the timing belt tight.

In a variation of the second embodiment, Fig 14, cams have replaced the eccentric pins of the control shaft. Under the camming action of said cams on the pillar bridges, the cylinder head is displaced and the compression ratio varies.

In another variation of the second embodiment, Fig 15, toothed gears have replaced the eccentric pins of the control shaft. The toothed gears are meshed to rack gears formed on the bridges.

The proper design of the crankcase projections neither restricts the size of the intake and exhausts ports, as compared to the conventional engine, nor restricts the coolant passage areas 20 along the cylinder head.

The sealing is easy, for instance by means of a rubber seal 18 inserted into a groove formed in the crankcase and being in touch to a properly shaped surface 19 around the cylinder head.

The angular displacement of the control shaft can be manual, mechanical, hydraulic, electrical etc. Knock sensors and feedback control enable HCCI operation.

Replacement Sheet

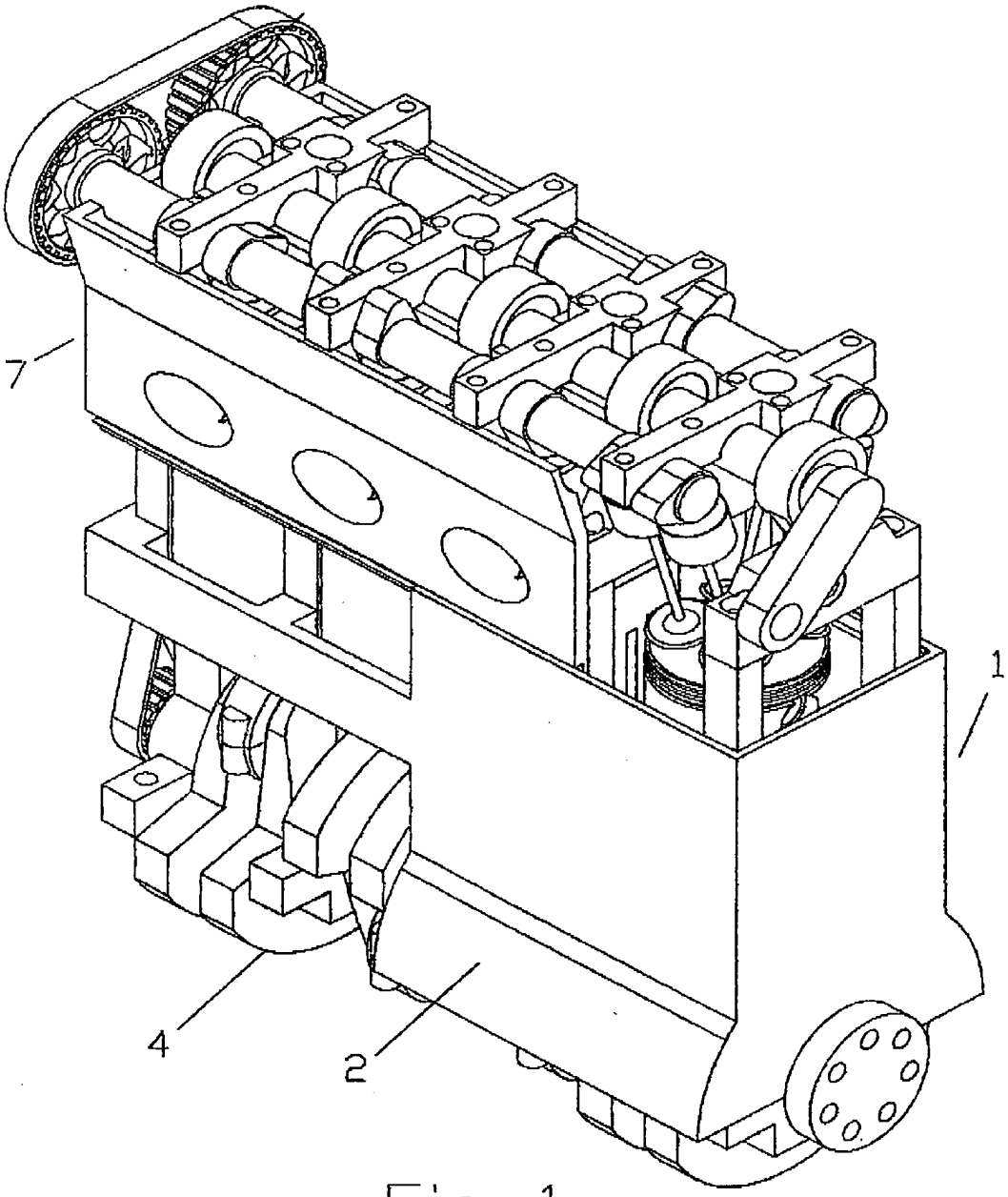

Fig 1

Replacement Sheet 9/22

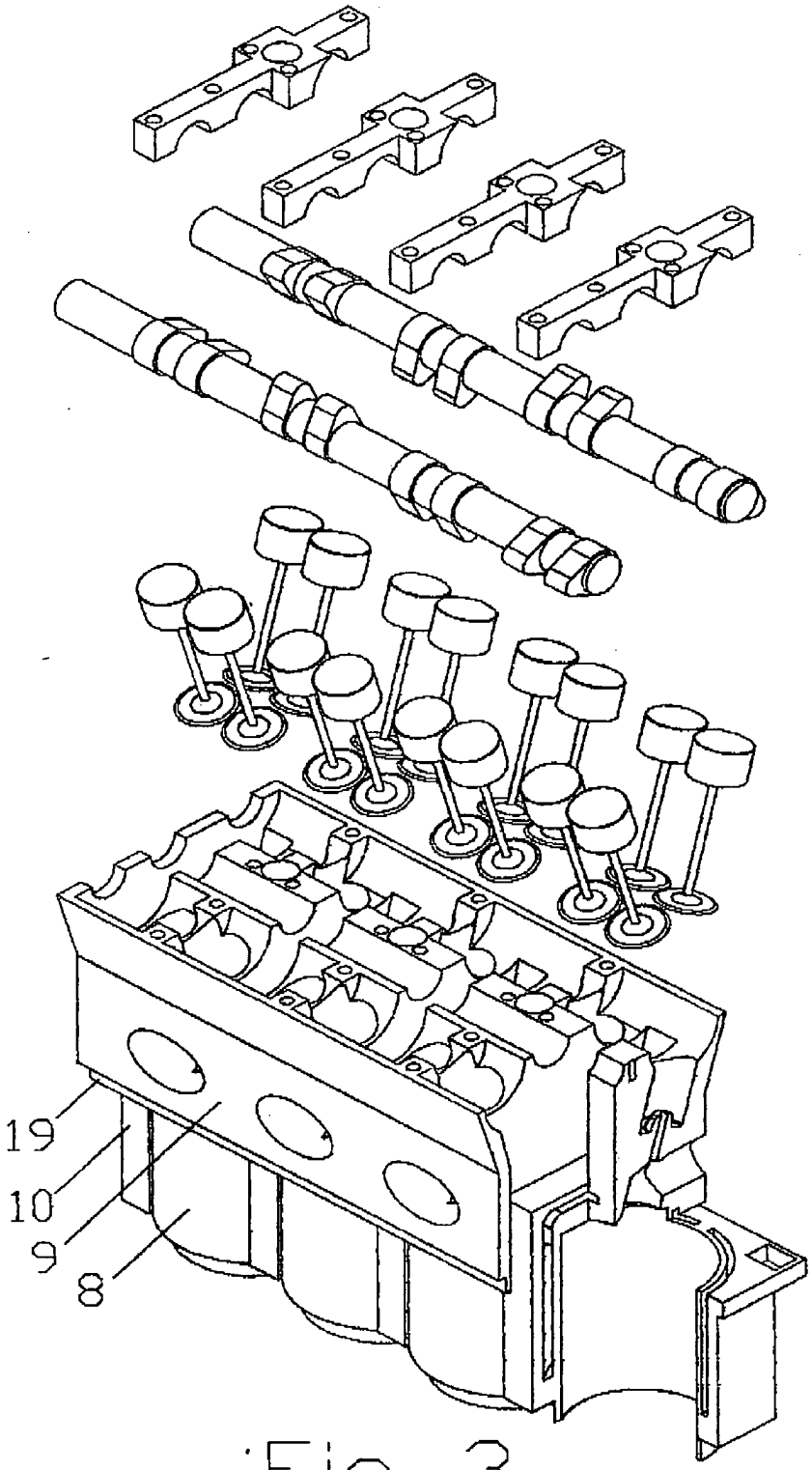

Fig 3

Replacement Sheet 10/22

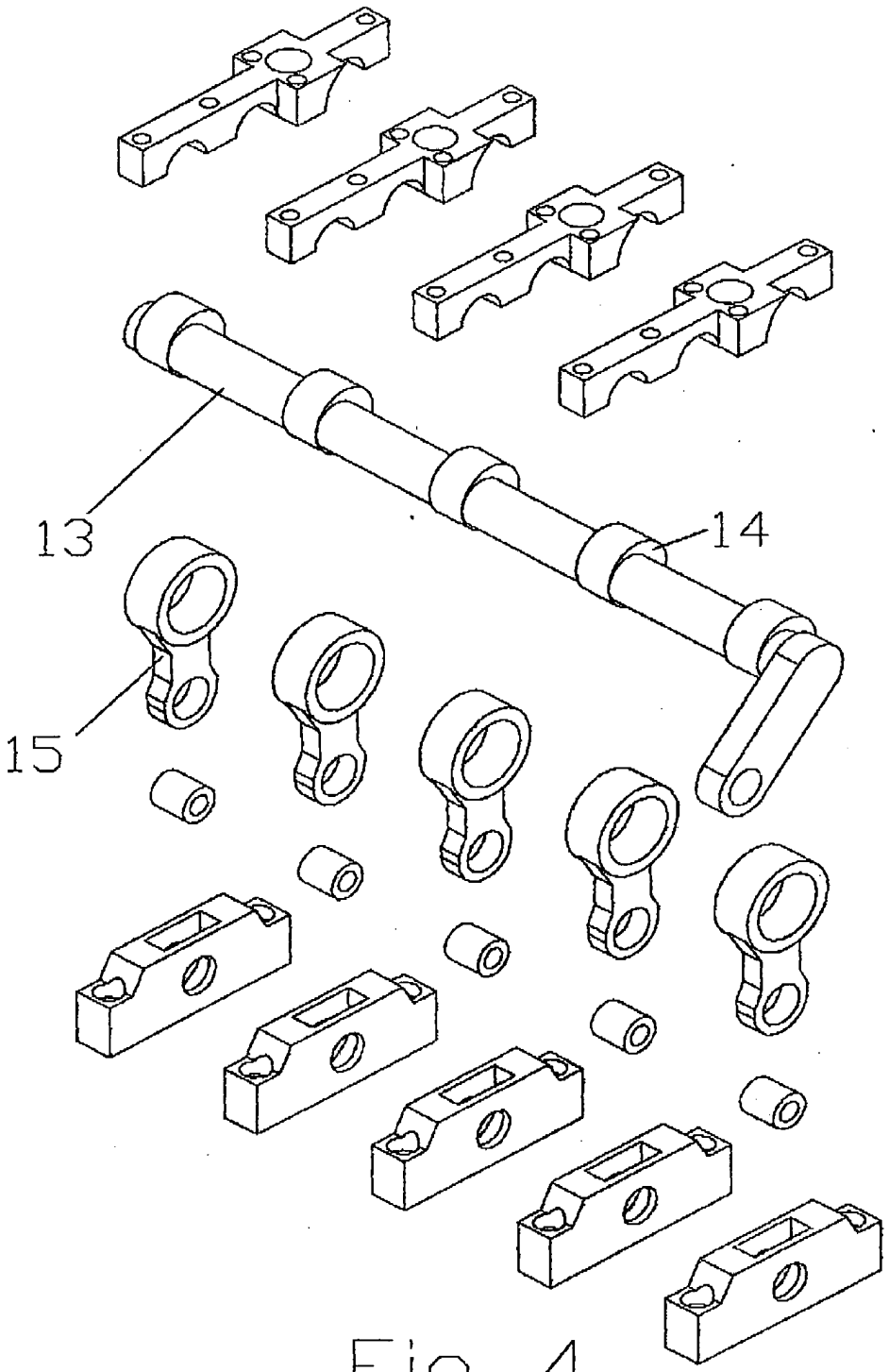

Fig 4

Replacement Sheet 11/22

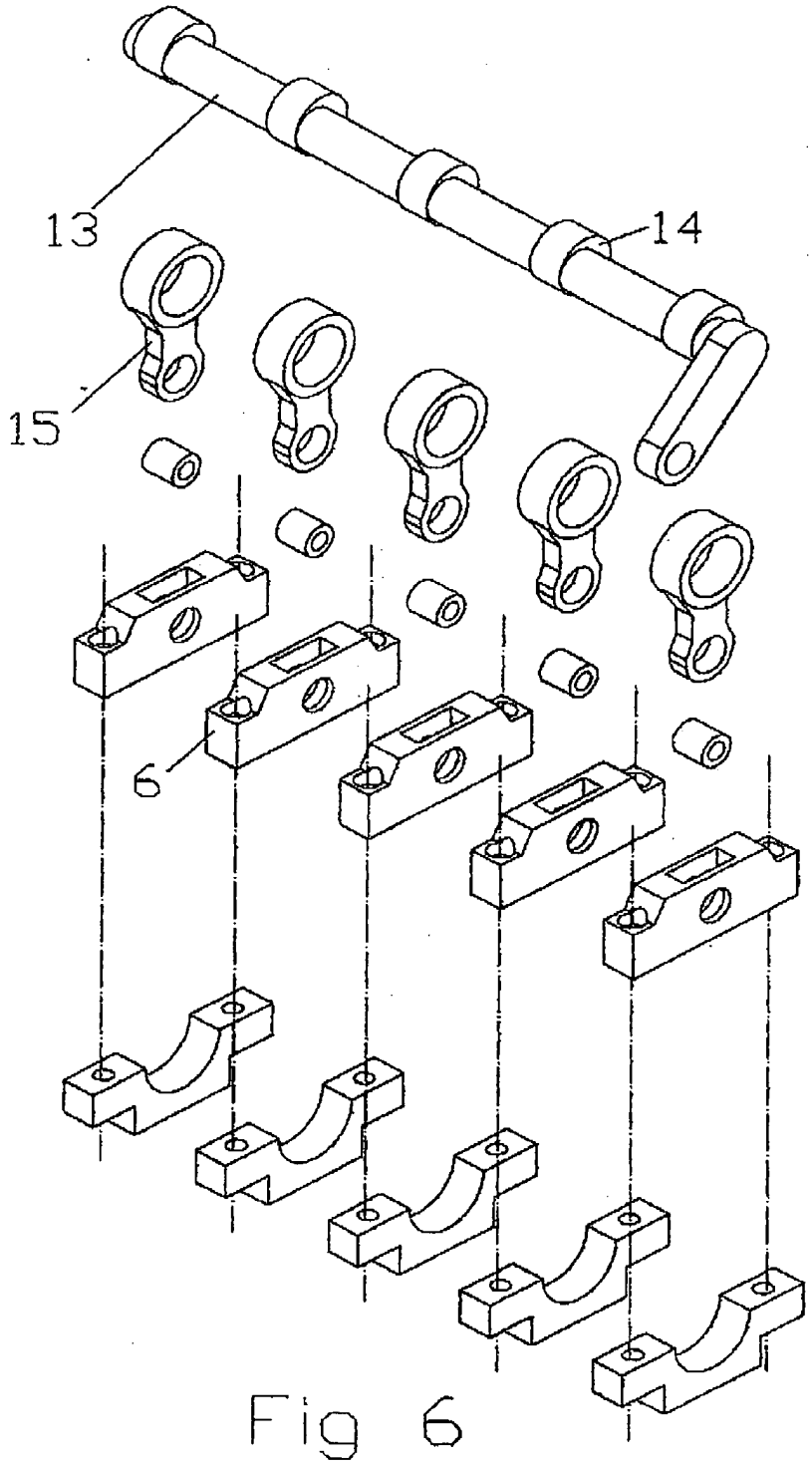

Fig 6

Replacement Sheet

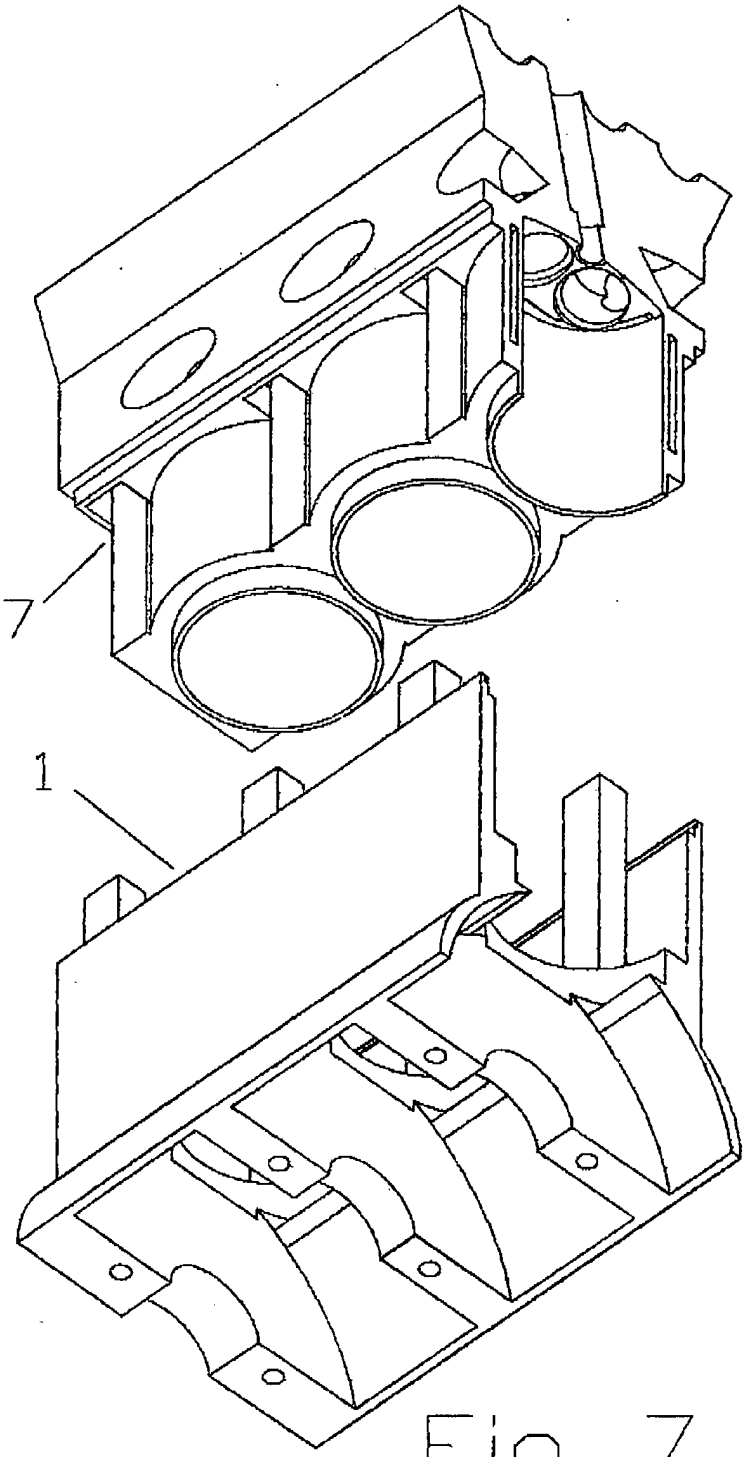

Fig 7

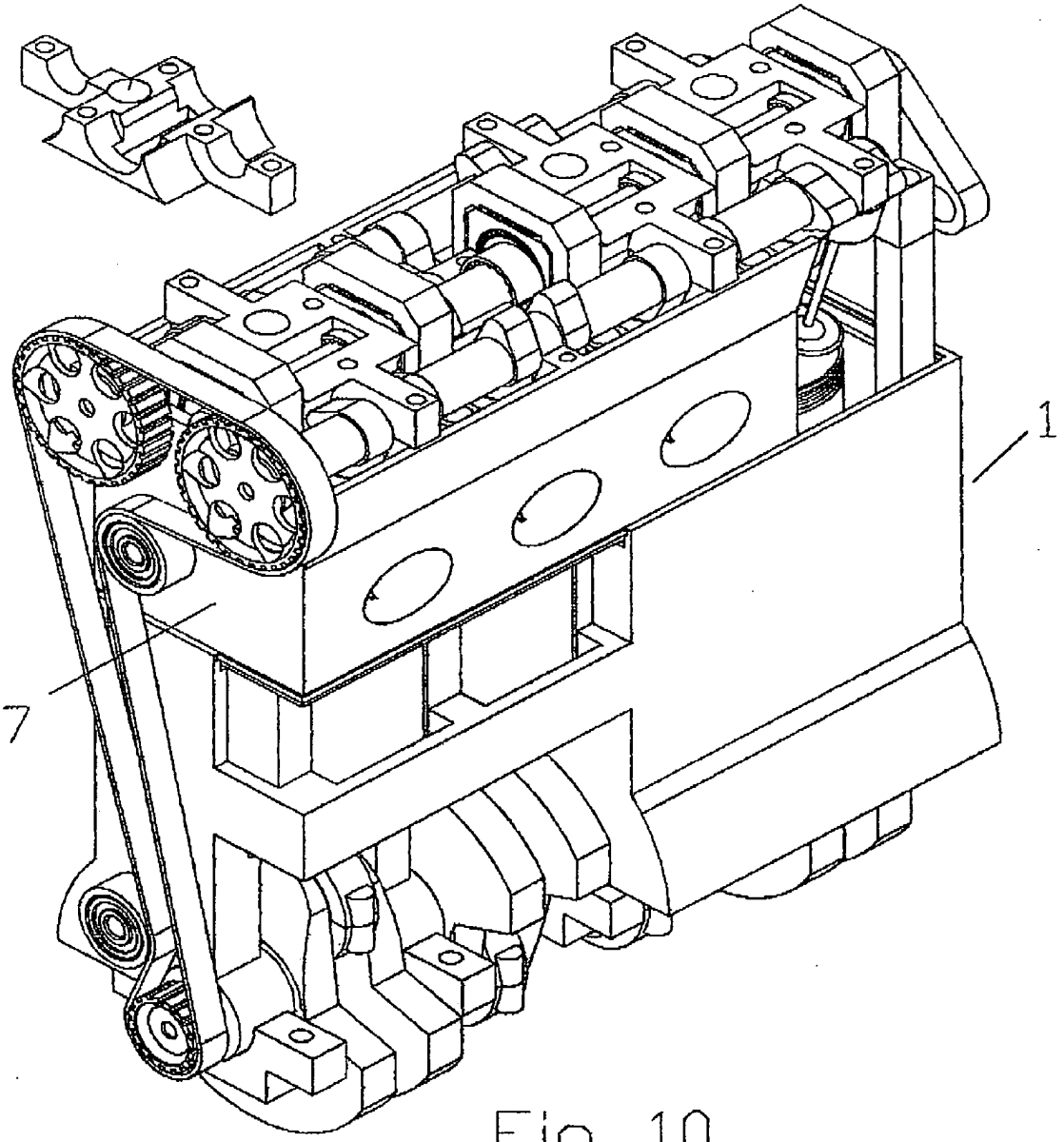

Fig 10

Replacement Sheet

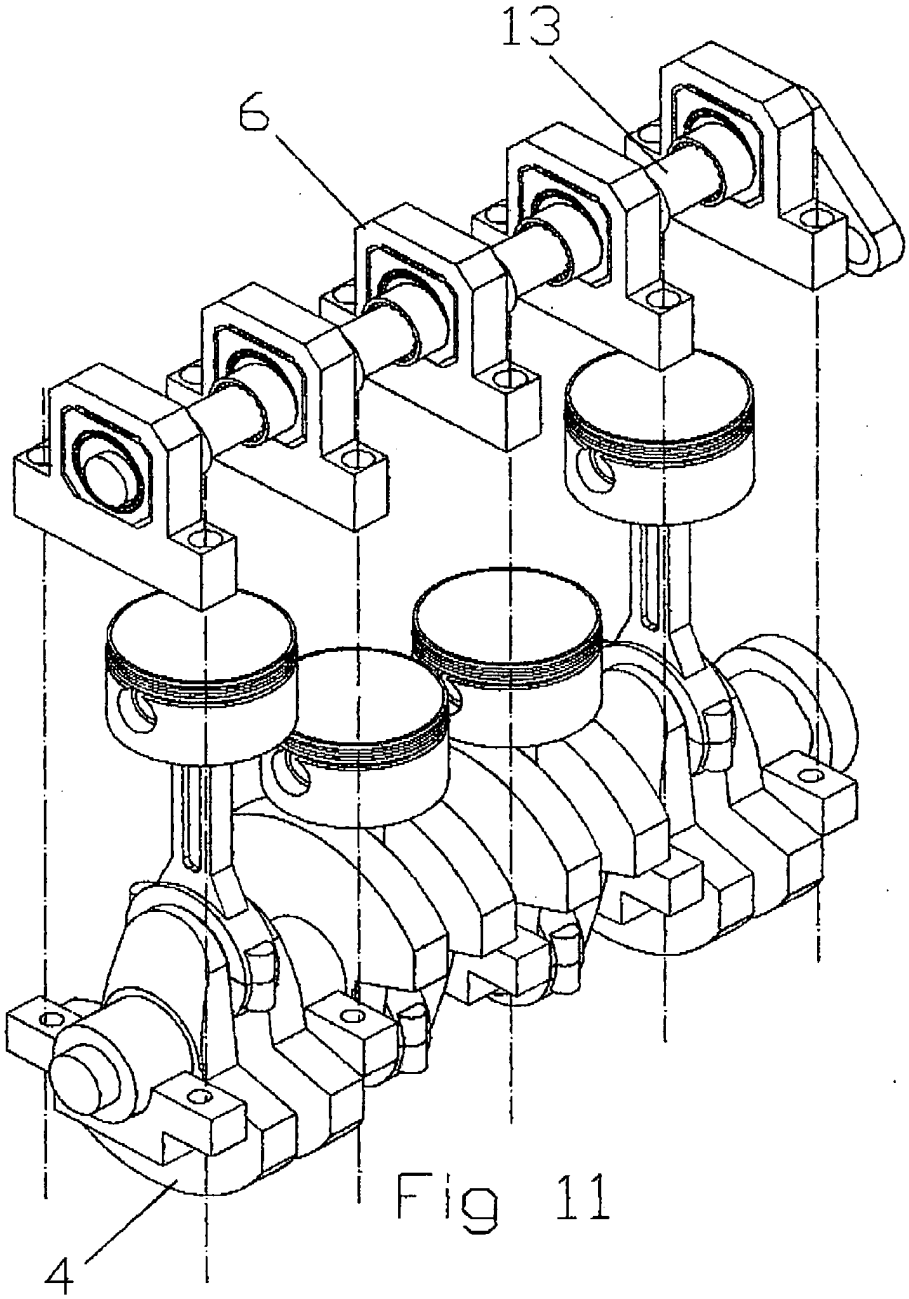

Fig 11

Replacement Sheet

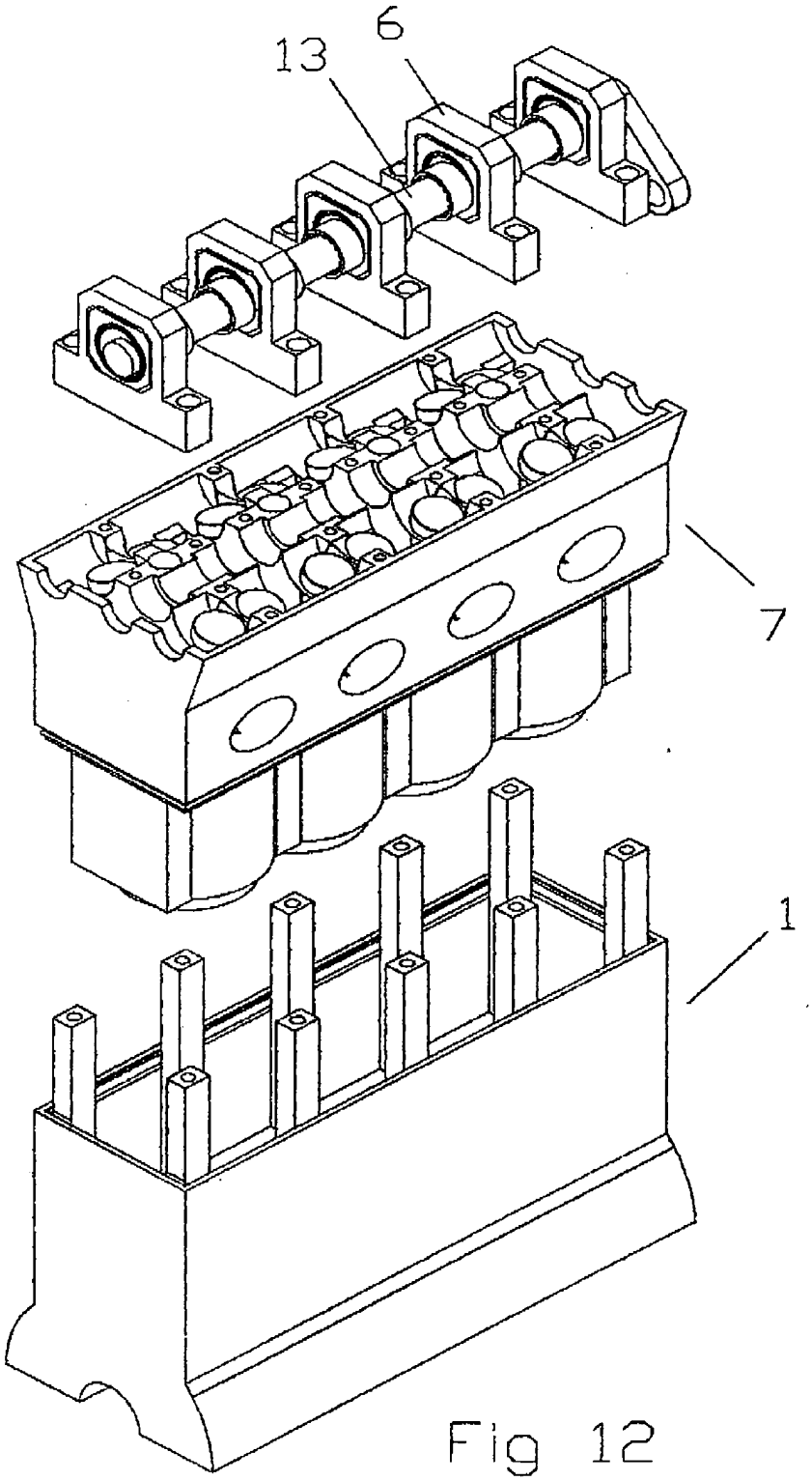

Fig 12

Replacement Sheet

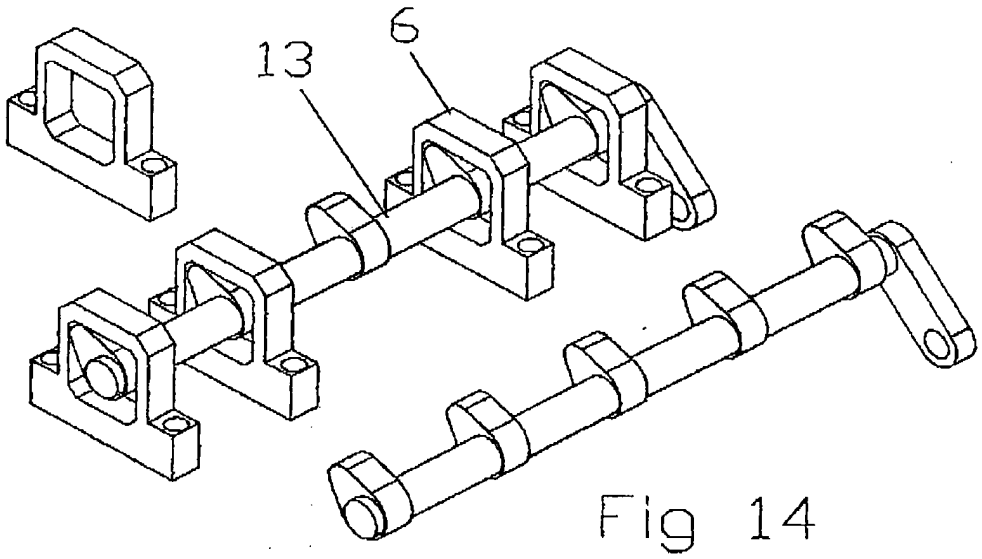

Fig 14

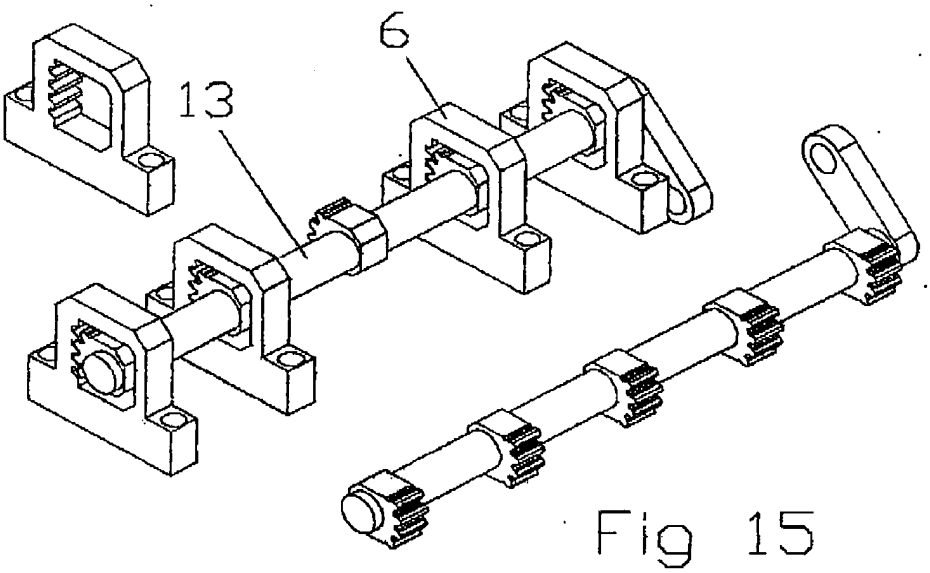

Fig 15

TITLE OF THE INVENTION.

VARIABLE COMPRESSION RATIO ENGINE

BACKGROUND OF THE INVENTION

In the prior art, like SAAB's PCT/SE91/818 and Toyota's US7,047,917, a pair of connecting shafts is arranged at the two sides of the cylinder block, laterally, to connect the upper and lower sections of the engine. The rotation of a control shaft displaces the cylinder head relative to the crankcase to vary the compression ratio. The inevitable long distance between the two connecting shafts generates heavy bending loads, flexing and noise, making the reinforcement of the two sections inevitable.

BRIEF SUMMARY OF THE INVENTION

In this patent, a variable compression ratio internal combustion engine comprises a base section and a movable section slidably fitted to each other.

The movable section comprises a cylinder head and a cylinder block.

The base section comprises a crankcase, or a casing in general. There are projections of the crankcase into the cylinder head to provide supports for receiving the forces applied to the cylinder head from the high-pressure gas into the combustion chamber. These projections comprise pillars starting near the crankshaft base bearings and ~~enter~~ entering, through proper openings, into the cylinder head, they also comprise bridges firmly interconnecting the free ends of the pillars to strengthen the structure and to provide supports to a control shaft.

In the conventional cylinder block the narrowing between neighboring cylinders is an available free area for the pillars. Bearing the cylinder head, the pillars are loaded purely in tension and connect, as directly as desirable, the tightening screws of the crankshaft bearing caps to the tightening screws of the bridges. Limited to the bridges, the bending loads are no heavier than those in the crankshaft bearing caps, i.e. there is nothing special regarding the size or the design of the bridges.

The control shaft has eccentric pins or cams or toothed gears etc. The crankcase bears the control shaft and the control shaft bears the cylinder head, longitudinally.

The architecture of the crankcase projections fits the direction of the gas pressure forces on the cylinder head, resulting in pure tensile loading of the pillars.

There are sliders on the cylinder block, at the height where the piston skirts thrust the cylinder walls. These sliders thrust on respective crankcase sliders in order to pass the thrust loads of the cylinder block onto the crankcase. These loads are several times weaker than those on the cylinder head. The pillars of the crankcase projections can serve as the crankcase sliders, too. The bridging of the free ends of the pillars and the small distance of the thrust loads from the crankcase side of the pillars ~~enables the structure to withstand heavy thrust loads~~ improve the thrust load capacity of the structure.

The cylinder block, being free from transferring to the crankcase the forces applied on the cylinder head, becomes lighter and distortion free. The forces tending to separate the cylinder head from the cylinder are small enabling the reliable sealing of the combustion chamber. The union of the cylinder head with the

cylinder block in a single piece is a further option, better as regards the cooling, the simplicity, the robustness, the cost and the reliability.

The control shaft is pivotally mounted either on the cylinder head or on the crankcase projections. The control shaft supported on the crankcase ~~projection~~ projections directly, ~~or by connecting means like connecting rods or sliders~~ or by connecting rods sliders and the likes, receives the forces applied on the cylinder head and supports the cylinder head. The angular displacement of the control shaft varies the compression ratio by displacing the cylinder head relative to the crankshaft.

BRIEF DESCRIPTION OF THE SEVERAL VIEWS OF THE DRAWING(S).

Figs 1 to 9 show a first embodiment.

Fig 1 shows the engine partly sliced.

Fig 2 shows the base section and the movable section separated, with the control shaft between them.

Fig 3 shows the movable section disassembled and the bearings for mounting the control shaft.

Fig 4 shows the control shaft and the bridges of the pillars.

Fig 5 shows the crankcase, the projections of the crankcase and the parts for the connection of the crankcase to the control shaft.

Fig 6 shows the control shaft, the lower bearings of the crankshaft, the bridges of the pillars and the straight way for passing the loads.

Fig 7 shows the robust, yet compact and light, structure of the crankcase.

Fig 8 shows sections of the engine.

Fig 9 shows the section D-D of Fig 8 exploded.

Figs 10 to 13 show a second embodiment.

Fig 10 shows the engine partly sliced, a bearing cup from the other side, the timing belt and the sprockets.

Fig 11 shows the crankshaft, the connecting rods and the pistons of the engine, the control shaft, the bridges and the direct passing of the loads from the cylinder head, through the pillars, to the lower bearings of the crankshaft.

Fig 12 shows at top the bridges and the control shaft, at middle the cylinder head and at bottom the crankcase with its pillars.

Fig 13 shows details of the control shaft, the bridges, the sliders and the roller bearings.

Fig 14 shows a variation of the second embodiment.

Fig 15 shows another variation of the second embodiment.

DETAILED DESCRIPTION OF THE INVENTION.

In a first embodiment, on top of the cylinder head 9 of the movable section 7, a control shaft 13 is pivotally mounted in the space between the two camshafts, leaving ~~area~~ space for a centrally located spark in the combustion chamber 12.

The crankcase 2, of the base section 1, has projections 6 comprising pillars and bridges.

The control shaft has eccentric pins 14.

The connecting rods 15 are pivotally mounted at one end on said eccentric pins 14 and at the other end on the crankcase projections 6.

The movable section 7 is slidably fitted on the crankcase 2 by means of the cylinder sliders 10 and the crankcase sliders 5. The ~~trust~~ thrust loads of the cylinders pass through the cylinder sliders 10 to the crankcase 2.

The angular displacement of the control shaft displaces the cylinder head, relative to the crankshaft, varying the compression ratio. The control shaft receives the forces applied to the cylinder head and passes them, through the connecting rods 15, to the bridges, then to the pillars and finally to the lower crankcase. Compared to the gas pressure force carried by the connecting rod to the crankshaft 4, each pillar carries less than a quarter and each short connecting rod 15 carries less than half.

In a second embodiment, the control shaft 13 is pivotally mounted on the cylinder head by means of needle roller bearings and has eccentric pins 14. First ~~slider means~~ sliders 16 are pivotally mounted on the eccentric pins 14, they are also slidably fitted into second ~~slider means~~ sliders 17 formed in the bridges of the free ends of the pillars. The angular displacement of the control shaft 13 displaces the cylinder head 9 relative to the crankcase varying the compression ratio. All heavy loaded pivot joints and sliders can be of the needle roller bearing type to avoid lubrication issues.

The geometry of the arrangement of the timing belt shown in Fig 10 can keep substantially unchanged the timing between the crankshaft and the camshafts. The roller just below the two camshaft sprockets has a shaft secured on the base section. The other roller, near the crankshaft, keeps the timing belt tight.

In a variation of the second embodiment, Fig 14, cams have replaced the eccentric pins of the control shaft. Under the camming action of said cams on the pillar bridges, the cylinder head is displaced and the compression ratio varies.

In another variation of the second embodiment, Fig 15, toothed gears have replaced the eccentric pins of the control shaft. The toothed gears are meshed to rack gears formed on the bridges.

The proper design of the crankcase projections neither restricts the size of the intake and exhausts ports, as compared to the conventional engine, nor restricts the coolant passage areas 20 along the cylinder head.

The sealing is easy, for instance by means of a rubber seal 18 inserted into a groove formed in the crankcase and being in touch to a properly shaped surface 19 around the cylinder head.

The angular displacement of the control shaft can be manual, mechanical, hydraulic, electrical etc. Knock sensors and feedback control ~~enables~~ <u>enable</u> HCCI operation.

UNITED STATES PATENT AND TRADEMARK OFFICE

UNITED STATES DEPARTMENT OF COMMERCE
United States Patent and Trademark Office
Address: COMMISSIONER FOR PATENTS
P.O. Box 1450
Alexandria, Virginia 22313-1450
www.uspto.gov

APPLICATION NO.	FILING DATE	FIRST NAMED INVENTOR	ATTORNEY DOCKET NO.	CONFIRMATION NO.
12/404,355	03/16/2009	Manousos Pattakos		1641

7590 02/17/2012

Manousos Pattakos
Lampraki 406
PC 18452 GR
Nikea Piraeus, 18452
GREECE

EXAMINER
KAMEN, NOAH P

ART UNIT	PAPER NUMBER
3783	

MAIL DATE	DELIVERY MODE
02/17/2012	PAPER

Please find below and/or attached an Office communication concerning this application or proceeding.

The time period for reply, if any, is set in the attached communication.

Office Action Summary	Application No.	Applicant(s)	
	12/404,355	PATTAKOS ET AL.	
	Examiner	Art Unit	
	NOAH KAMEN	3783	

-- The MAILING DATE of this communication appears on the cover sheet with the correspondence address --

Period for Reply

A SHORTENED STATUTORY PERIOD FOR REPLY IS SET TO EXPIRE 2 MONTH(S) OR THIRTY (30) DAYS, WHICHEVER IS LONGER, FROM THE MAILING DATE OF THIS COMMUNICATION.

- Extensions of time may be available under the provisions of 37 CFR 1.136(a). In no event, however, may a reply be timely filed after SIX (6) MONTHS from the mailing date of this communication.
- If NO period for reply is specified above, the maximum statutory period will apply and will expire SIX (6) MONTHS from the mailing date of this communication.
- Failure to reply within the set or extended period for reply will, by statute, cause the application to become ABANDONED (35 U.S.C. § 133). Any reply received by the Office later than three months after the mailing date of this communication, even if timely filed, may reduce any earned patent term adjustment. See 37 CFR 1.704(b).

Status

1)☐ Responsive to communication(s) filed on _____.

2a)☐ This action is **FINAL**. 2b)☐ This action is non-final.

3)☐ An election was made by the applicant in response to a restriction requirement set forth during the interview on _____; the restriction requirement and election have been incorporated into this action.

4)☒ Since this application is in condition for allowance except for formal matters, prosecution as to the merits is closed in accordance with the practice under *Ex parte Quayle*, 1935 C.D. 11, 453 O.G. 213.

Disposition of Claims

5)☒ Claim(s) *1-10* is/are pending in the application.

5a) Of the above claim(s) _____ is/are withdrawn from consideration.

6)☒ Claim(s) *1-10* is/are allowed.

7)☐ Claim(s) _____ is/are rejected.

8)☐ Claim(s) _____ is/are objected to.

9)☐ Claim(s) _____ are subject to restriction and/or election requirement.

Application Papers

10)☒ The specification is objected to by the Examiner.

11)☒ The drawing(s) filed on *16 March 2009* is/are: a)☐ accepted or b)☒ objected to by the Examiner.

Applicant may not request that any objection to the drawing(s) be held in abeyance. See 37 CFR 1.85(a).

Replacement drawing sheet(s) including the correction is required if the drawing(s) is objected to. See 37 CFR 1.121(d).

12)☐ The oath or declaration is objected to by the Examiner. Note the attached Office Action or form PTO-152.

Priority under 35 U.S.C. § 119

13)☐ Acknowledgment is made of a claim for foreign priority under 35 U.S.C. § 119(a)-(d) or (f).

a)☐ All b)☐ Some * c)☐ None of:

1.☐ Certified copies of the priority documents have been received.

2.☐ Certified copies of the priority documents have been received in Application No. _____.

3.☐ Copies of the certified copies of the priority documents have been received in this National Stage application from the International Bureau (PCT Rule 17.2(a)).

* See the attached detailed Office action for a list of the certified copies not received.

Attachment(s)

1) ☒ Notice of References Cited (PTO-892)
2) ☐ Notice of Draftsperson's Patent Drawing Review (PTO-948)
3) ☐ Information Disclosure Statement(s) (PTO/SB/08) Paper No(s)/Mail Date _____.
4) ☐ Interview Summary (PTO-413) Paper No(s)/Mail Date. _____ .
5) ☐ Notice of Informal Patent Application
6) ☐ Other: _____.

DETAILED ACTION

Prosecution on the merits is closed in accordance with the practice under *Ex parte Quayle*, 25 USPQ 74, 453 O.G. 213, (Comm'r Pat. 1935).

A shortened statutory period for reply to this action is set to expire **TWO MONTHS** from the mailing date of this letter.

This application is in condition for allowance except for the following formal matters:

Drawings

The drawings are objected to as failing to comply with 37 CFR 1.84(p)(5) because they do not include numbered elements: see figures 1-7, 10-12, 14, and 15. Corrected drawing sheets in compliance with 37 CFR 1.121(d) are required in reply to the Office action to avoid abandonment of the application. Any amended replacement drawing sheet should include all of the figures appearing on the immediate prior version of the sheet, even if only one figure is being amended. Each drawing sheet submitted after the filing date of an application must be labeled in the top margin as either "Replacement Sheet" or "New Sheet" pursuant to 37 CFR 1.121(d). If the changes are not accepted by the examiner, the applicant will be notified and informed of any required corrective action in the next Office action. The objection to the drawings will not be held in abeyance. **NOTE**, the specification must also set forth numbered elements when discussing them with respect to a particular figure.

Specification

The following guidelines illustrate the preferred layout for the specification of a utility application. These guidelines are suggested for the applicant's use.

Arrangement of the Specification

As provided in 37 CFR 1.77(b), the specification of a utility application should include the following sections in order. Each of the lettered items should appear in upper case, without

underlining or bold type, as a section heading. If no text follows the **section heading**, the phrase "Not Applicable" should follow the section heading:

(a) TITLE OF THE INVENTION.
(b) CROSS-REFERENCE TO RELATED APPLICATIONS.
(c) STATEMENT REGARDING FEDERALLY SPONSORED RESEARCH OR DEVELOPMENT.
(d) THE NAMES OF THE PARTIES TO A JOINT RESEARCH AGREEMENT.
(e) INCORPORATION-BY-REFERENCE OF MATERIAL SUBMITTED ON A COMPACT DISC.
(f) BACKGROUND OF THE INVENTION.
(1) Field of the Invention.
(2) Description of Related Art including information disclosed under 37 CFR 1.97 and 1.98.
(g) BRIEF SUMMARY OF THE INVENTION.
(h) BRIEF DESCRIPTION OF THE SEVERAL VIEWS OF THE DRAWING(S).
(i) DETAILED DESCRIPTION OF THE INVENTION.
(j) CLAIM OR CLAIMS (commencing on a separate sheet).
(k) ABSTRACT OF THE DISCLOSURE (commencing on a separate sheet).
(l) SEQUENCE LISTING (See MPEP § 2424 and 37 CFR 1.821-1.825. A "Sequence Listing" is required on paper if the application discloses a nucleotide or amino acid sequence as defined in 37 CFR 1.821(a) and if the required "Sequence Listing" is not submitted as an electronic document on compact disc).

Also, the specification must have the lines numbered by groups of 5; i.e. line 5, 10, 15, 20 etc. Paragraph indentations are missing.

The use of "means" should only be used in the claims, not the specification.

The specification could benefit from grammatical/editorial polishing; it is evident that English is not applicants' first language.

Any inquiry concerning this communication or earlier communications from the examiner should be directed to NOAH KAMEN whose telephone number is (571)272-4845. The examiner can normally be reached on M-Th 6:30-5:00.

If attempts to reach the examiner by telephone are unsuccessful, the examiner's supervisor, Michael Cuff can be reached on 571 272 6778. The fax phone number for the organization where this application or proceeding is assigned is 571-273-8300.

Information regarding the status of an application may be obtained from the Patent Application Information Retrieval (PAIR) system. Status information for published applications may be obtained from either Private PAIR or Public PAIR. Status information for unpublished applications is available through Private PAIR only. For more information about the PAIR system, see http://pair-direct.uspto.gov. Should you have questions on access to the Private PAIR system, contact the Electronic Business Center (EBC) at 866-217-9197 (toll-free). If you would like assistance from a USPTO Customer Service Representative or access to the automated information system, call 800-786-9199 (IN USA OR CANADA) or 571-272-1000.

Noah Kamen
Primary Examiner
Art Unit 3783

/Noah Kamen/
Primary Examiner, Art Unit 3783

Notice of References Cited	Application/Control No. 12/404,355	Applicant(s)/Patent Under Reexamination PATTAKOS ET AL.	
	Examiner NOAH KAMEN	Art Unit 3783	Page 1 of 1

U.S. PATENT DOCUMENTS

*		Document Number Country Code-Number-Kind Code	Date MM-YYYY	Name	Classification
*	A	US-6,880,499	04-2005	Hoffmann et al.	123/48C
	B	US-			
	C	US-			
	D	US-			
	E	US-			
	F	US-			
	G	US-			
	H	US-			
	I	US-			
	J	US-			
	K	US-			
	L	US-			
	M	US-			

FOREIGN PATENT DOCUMENTS

*		Document Number Country Code-Number-Kind Code	Date MM-YYYY	Country	Name	Classification
	N	DE 4211589 A1	10-1993	Germany	ROSSMANN, MICHAEL	
	O					
	P					
	Q					
	R					
	S					
	T					

NON-PATENT DOCUMENTS

*		Include as applicable: Author, Title Date, Publisher, Edition or Volume, Pertinent Pages)
	U	
	V	
	W	
	X	

*A copy of this reference is not being furnished with this Office action. (See MPEP § 707.05(a).)
Dates in MM-YYYY format are publication dates. Classifications may be US or foreign.

(19) BUNDESREPUBLIK DEUTSCHLAND

DEUTSCHES PATENTAMT

(12) **Offenlegungsschrift**

(10) **DE 42 11 589 A 1**

(51) Int. Cl.[5]:
F 02 D 15/04
F 02 F 1/16
F 02 F 1/38
F 01 L 1/04
F 01 L 1/34

(21) Aktenzeichen: P 42 11 589.2
(22) Anmeldetag: 7. 4. 92
(43) Offenlegungstag: 14. 10. 93

DE 42 11 589 A 1

(71) Anmelder:
Audi AG, 85057 Ingolstadt, DE

(72) Erfinder:
Rossmann, Michael, 8079 Buxheim, DE

(56) Für die Beurteilung der Patentfähigkeit in Betracht zu ziehende Druckschriften:

DE	35 42 629 C2
DE	40 26 013 A1
DE	39 11 955 A1
DE	33 18 093 A1
DE	24 04 231 A1

(54) Hubkolben-Brennkraftmaschine mit veränderbarer Verdichtung

(57) Die Erfindung betrifft eine Hubkolben-Brennkraftmaschine mit veränderbarer Verdichtung, bei der ein Zylindergehäuse mit einem Zylinderkopf mit Gaswechselventilen verbunden ist, wobei das Zylindergehäuse in einem separaten Kurbelgehäuse axial verschiebbar geführt ist und eine Verstellvorrichtung vorgesehen ist, die von einem Steuergerät gesteuert die Verdichtungsänderung abhängig von der Last und/oder der Drehzahl der Brennkraftmaschine bewirkt (Fig. 1).

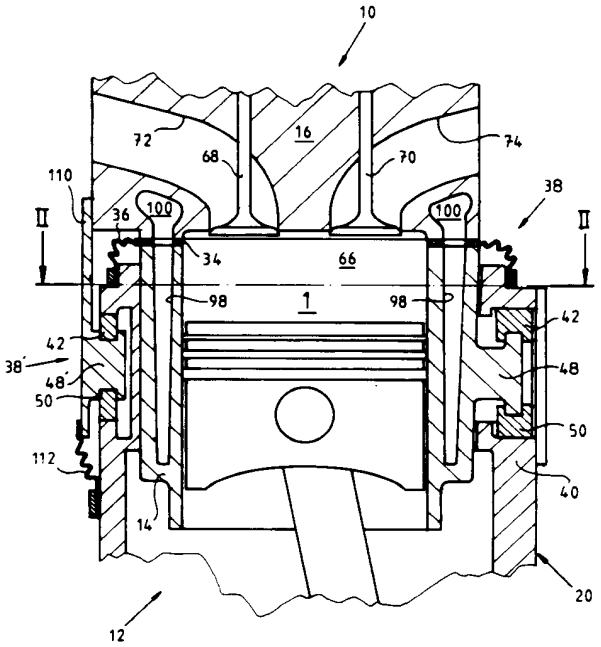

DE 42 11 589 A 1

Die folgenden Angaben sind den vom Anmelder eingereichten Unterlagen entnommen

BUNDESDRUCKEREI 08. 93 308 041/91 10/52

Beschreibung

Die Erfindung betrifft eine Hubkolben-Brennkraftmaschine mit veränderbarer Verdichtung.

Um den Wirkungsgrad von Brennkraftmaschinen insbesondere im Teillastbereich zu verbessern, ist es bekannt, u. a. eine variable Verdichtung der Verbrennungsluft oder eines Brennstoff-Luftgemisches zu steuern. Dabei gibt es viele Vorschläge, die entweder die rotierenden und/oder oszillierenden Massen des Kurbeltriebes erhöhen oder verkomplizieren oder die ungünstige, zerklüftete Brennräume (Nebenkolben) verursachen.

Aufgabe der Erfindung ist es, eine Vorrichtung der gattungsgemäßen Art vorzuschlagen, die die o.a. Beeinträchtigungen nicht aufweist, die robust und zuverlässig ist und die besonders kompatibel mit begleitenden Maßnahmen zur Wirkungsgradverbesserung und/oder Abgasentgiftung einsetzbar ist.

Diese Aufgabe wird erfindungsgemäß mit den kennzeichnenden Merkmalen des Patentanspruches 1 gelöst. Vorteilhafte und besonders zweckmäßige Weiterbildungen der Erfindung sind den weiteren Patentansprüchen entnehmbar.

Erfindungsgemäß ist ein Zylinderkopf mit Gaswechselventilen mit einem Zylindergehäuse verbunden, bevorzugt verschraubt, und das Zylindergehäuse im Kurbelgehäuse der Brennkraftmaschine axial verschiebbar geführt. Zylindergehäuse und Zylinderkopf sind von einer Verstellvorrichtung gehalten, die von einem Steuergerät angesteuert die Verdichtungsänderung abhängig von der Last und/oder der Drehzahl der Brennkraftmaschine einstellt. Somit bleiben als eine Einheit das Kurbelgehäuse mit Kurbeltrieb und als zweite Einheit der Brennraum (Verdichtungsraum) mit Gaswechselventilen unverändert, während über die Führungen und die Verstellvorrichtungen die Gaskräfte abgestützt werden und der Brennraum bzw. das Verdichtungsverhältnis im gewünschten Maße (z. B. zwischen 10 und 20) veränderbar ist.

Die Verstellvorrichtung kann gemäß Anspruch 2 durch mehrere im Kurbelgehäuse geführte Schieber mit Schrägführungen gebildet sein, die mit Gleitsteinen an dem Zylindergehäuse oder am Zylinderkopf zusammenwirken.

Diese Schieber ermöglichen ein feinfühlige, durch das gewählte Kraftwegverhältnis leichtgängige Verstellung und bilden eine auf Dauer spielfreie Abstützung der Gaskräfte und der auftretenden Schwingungen.

Die Schieber können elektromotorisch, pneumatisch, bevorzugt jedoch hydraulisch betätigt sein, wobei deren Ansteuerung durch zumindest ein elektrisches Steuerventil bewirkt ist. Eine derartige Steuerung ermöglicht eine schnell ansprechende und exakte Verstellung.

Durch die Merkmale des Patentanspruches 4 wird ein zuverlässiges Starten der Brennkraftmaschine und eine zuverlässige Notlauffunktion bei defekter Steuerung der Verstellvorrichtung sichergestellt.

Die Patentansprüche 5 und 6 beschreiben eine leichte und trotzdem spiel freie sowie herstellungstechnisch einfache Gestaltung der Führungen und der Verstellvorrichtung zwischen Kurbelgehäuse und Zylindergehäuse.

Die erfindungsgemäße Brennkraftmaschine könnte insgesamt ölgekühlt sein, wobei diese Kühlung über das Schmieröl im Kurbelgehäuse bewirkt werden könnte. Bevorzugt wird jedoch vorgeschlagen, zumindest den Zylinderkopf, ggf. jedoch Zylinderkopf und Zylindergehäuse mit Wasser zu kühlen, wobei die ggf. vorhandene Wasserpumpe an den Zylinderkopf angebaut bzw. in diesen integriert sein könnte.

Besonders vorteilhaft kann die Verstellvorrichtung zumindest einen Positionsgeber aufweisen, der zur Bildung einer Regelschleife mit dem Steuergerät verbunden ist, so daß eine genaue Verdichtungssteuerung gegeben ist. Dabei können in dem Steuergerät Kennlinien über der Last und der Drehzahl und ggf. der Temperatur der Brennkraftmaschine abgelegt sein, die hinsichtlich des Abgasverhaltens und des Wirkungsgrades der Brennkraftmaschine optimiert sind und die elektronisch entsprechend verknüpft eingesteuert bzw. abgefahren werden. Das Steuergerät kann dabei in ein zentrales Steuergerät für das Motormanagement und die Antriebsteuerung integriert sein.

Gleiches gilt für die Steuerung der Gaswechselventile, die ggf. pneumatisch, hydraulisch oder elektromagnetisch ausgeführt sein kann. Bei einer mechanischen Ventilsteuerung mit einer drehbar gelagerten Nockenwelle im Zylinderkopf wird vorgeschlagen, daß im Antrieb der Nockenwelle eine Phasenverstellvorrichtung und ebenfalls ein Positionsgeber angeordnet sind, so daß eine entsprechende Verarbeitung im Steuergerät und eine entsprechende Aussteuerung die Phasenabweichungen aufgrund von Verdichtungsänderungen kompensierbar sind. So kann der Antrieb der zumindest einen Nockenwelle über einen Zahnriemen oder eine Steuerkette erfolgen und es kann im Antriebstrum des Zugmittels eine Umlenkrolle vorgesehen sein, die hydraulisch verstellbar ist und die zur Kompensation der Phasenabweichungen das Antriebstrum mehr oder minder verkürzt. Es sind jedoch auch andere Phasenverstellvorrichtungen aus dem Stand der Technik anwendbar.

Es versteht sich, daß über diese Phasenverstellvorrichtung oder über eine weitere zusätzliche Verstellvorrichtung variable Steuerzeiten der Gaswechselventile nach Maßgabe der Last und der Drehzahl der Brennkraftmaschine aber auch nach Maßgabe der eingestellten Verdichtung steuerbar sind.

Gemäß Patentanspruch 11 können die Verdichtung und die Ventilsteuerzeiten sowie alle weiteren den Wirkungsgrad und die Abgaszusammensetzung beeinflussenden Einrichtungen der Brennkraftmaschine oder ggf. des gesamten Antriebsaggregates über ein zentrales kennfeldgesteuertes Motormanagement gesteuert sein mit einem entsprechenden Feedback zur Überwachung all dieser Funktionen.

Ein Ausführungsbeispiel der Erfindung ist im folgenden mit weiteren Einzelheiten näher erläutert. Die schematische Zeichnung zeigt in

Fig. 1 einen Längsschnitt entlang der Linie I-I der **Fig.** 2 durch eine Hubkolben-Brennkraftmaschine mit Verdichtungsänderung;

Fig. 2 einen Querschnitt gemäß Linie II-II der **Fig.** 1 durch die Brennkraftmaschine;

Fig. 3 einen weiteren Schnitt gemäß Linie III-III der **Fig.** 2 durch die Verstellvorrichtung zur Verdichtungsänderung;

Fig. 4 eine Ansicht gemäß Pfeil X der **Fig.** 2 auf den stirnseitigen Nockenwellenantrieb der Brennkraftmaschine.

Die **Fig.** 1, 2 und 4 zeigen den oberen Abschnitt einer fremdgezündeten Hubkolben-Brennkraftmaschine **(10)** in Reihenbauart mit vier Zylindern **1, 2, 3** (Zylinder **4** ist nicht dargestellt), die sich im wesentlichen zusammensetzt aus einem Kurbelgehäuse **(12)**, einem Zylindergehäuse **(14)** und einem Zylinderkopf **(16)**.

Das Kurbelgehäuse (12) ist soweit nicht dargestellt herkömmlicher Bauart, d. h. daß die Kurbelwelle und deren Lagerung, die Pleuel und die Kolben entsprechend dem Stand der Technik ausgebildet sind. Davon abweichend sind jedoch im Kurbelgehäuse (12) keine Zylinderlaufbahnen ausgebildet, sondern nach oben ragende glattflächige, im wesentlichen Rechteck bildende Seitenwände (18, 20) und Stirnwände (22) vorgesehen.

Innerhalb dieser Wände (18, 20, 22) ist mit einem geringfügigen Umfangspalt (s) das Zylindergehäuse (14) axial verschiebbar eingesetzt, wobei in seitlichen und stirnseitigen Abschnitten axial verlaufende Gleitschienen (24, 26) aus einem geeigneten Lagermaterial (z. B. Messing) vorgesehen sind. Die Gleitschienen (24, 26) sind in stufenförmig zurückgesetzte Führungsabschnitte (28, 30) des Kurbelgehäuses (12) bzw. der umlaufenden Wände (18, 20, 22) eingesetzt und werden von ihrer Rückseite her mit unter Druck stehendem Schmieröl der Brennkraftmaschine beaufschlagt. Dabei sorgen Ölbohrungen (32) für einen allseitigen Schmierölfilm an den Gleitschienen.

Das Zylindergehäuse (14) ist in an sich bekannter Weise mit dem Zylinderkopf (16) der Brennkraftmaschine mittels entsprechender, nicht dargestellter Zylinderkopfschrauben verschraubt. Zwischen Zylinderkopf (16) und Zylindergehäuse (14) ist eine Flachdichtung (34) eingelegt, an die eine umlaufende, temperaturbeständige Ringmanschette (36) angeformt ist, die an den umlaufenden Wänden (18, 20, 22) des Kurbelgehäuses (12) dichtend festgelegt ist. Die Ringmanschette (36) dichtet somit das Kurbelgehäuse (12) nach oben gegen austretendes Schmieröl oder Kurbelgehäusedämpfe ab.

Diametral gegenüberliegend ist im Übergangsbereich zwischen Seitenwand (18) und stirnseitiger Wand (22) des Kurbelgehäuses (12) je eine Verstellvorrichtung (38) (vgl. **Fig.** 2) vorgesehen, die aus einem in dem Wandbereich (40) des Kurbelgehäuses (12) senkrecht zur Zylinderachse verstellbaren Schieber (42) besteht, der über eine hydraulische Kolben-Zylindereinheit (44) verstellbar ist. Der Schieber (42) weist eine Schrägführung (46) auf, die mit einem an das Zylindergehäuse (14) angegossenen Gleitstein (48) zusammenwirkt. Zur Spielfreiheit des Gleitsteines (48) ist dem Schieber (42) gegenüberliegend ein Nachstellkeil (50) in der Wand (40) verschiebbar geführt, der sich über eine Druckfeder (52) mit einer definierten Vorspannung am Schieber (42) abstützt. In der Kolben-Zylindereinheit (44) ist eine weitere Druckfeder (54) vorgesehen, die den Kolben (56) innerhalb des Zylindergehäuses (58) in die Richtung vorspannt, die dem niedrigsten Verdichtungsverhältnis der Brennkraftmaschine (= niedrigste Eintauchtiefe des Zylindergehäuses (14) in das Kurbelgehäuse (12)) entspricht. Umgekehrt sollte die Druckfeder (54) den Kolben (56) in die der höchsten Verdichtung entsprechende Position vorspannen, wenn die Brennkraftmaschine nach dem Diesel-Prinzip arbeitet.

Die Kolben-Zylindereinheit (44) wird über ein schematisch angedeutetes elektrisches Taktventil (60) mit einem unter Druck stehenden Hydraulikmedium versorgt, während andererseits der Zylinderraum (61) über eine kalibrierte Bohrung (62) mit einer stets offenen Rücklaufleitung (64) verbunden ist. Bei geschlossenem Taktventil (60) nimmt somit der Kolben die der niedrigsten Verdichtung entsprechende Stellung ein, hingegen kann bei geöffnetem Taktventil (60) Hydraulikmedium eingesteuert werden, bis der Kolben (56) und damit verbunden der Schieber (42) eine auf der Zeichnung rechte Endposition erreicht haben, die der höchsten Verdichtung entspricht.

Der die Brennräume (66) (siehe **Fig.** 1) abdeckende Zylinderkopf (16) weist je Brennraum in bekannter Weise Gaswechselventile (68, 70) auf, die die Einlaßkanäle (72) für Verbrennungsluft und die Auslaßkanäle (74) für das Abgas steuern. Die Gaswechselventile (68, 70) werden über eine nicht dargestellte Ventilsteuerung mit einer Nockenwelle (76) betätigt. Die Nockenwelle und die Ventilsteuerung können herkömmlicher Bauart sein und sind deshalb nicht mehr gezeigt.

Der Antrieb der Nockenwelle (76) (vgl. **Fig.** 4) erfolgt von der Stirnseite der Brennkraftmaschine her über einen Zahnriemen (78), der von einem nicht dargestellten Zahnriemenrad auf der Kurbelwelle angetrieben ist und das Nockenwellenrad (80) mit der üblichen Übersetzung für 4-Takt-Brennkraftmaschinen antreibt. Der Zahnriemen (78) wird auf dem Antriebstrum (82) über eine erste Spannrolle (84) verstellt, wobei die Spanneinrichtung über eine hydraulische Stelleinheit (86) betätigt ist.

Ein zweites Spannrad (88) wirkt auf das Abtriebstrum (90), wobei dieses auf einem verschwenkbaren Hebel (92) gelagert und durch eine Feder (94) derart vorgespannt ist, daß an dem Zahnriemen eine gleichbleibende Vorspannung vorherrscht.

Während das Spannrad (88) dementsprechend für eine definierte Zahnriemenvorspannung sorgt, wird über das Spannrad (84) in Verbindung mit der hydraulischen Stelleinheit (86) eine Phasenverstellung der Nockenwelle (76) bewirkt, über die bei einer Verschiebung des Zylinderkopfes (16) mit dem Zylindergehäuse (14) relativ zum Kurbelgehäuse (12) eine gleichbleibende Steuerzeit bzw. Phasenübereinstimmung zwischen Kurbelwelle und Nockenwelle (76) erzielbar ist. Ferner kann über die Stelleinheit (86) auch unabhängig von einer Verdichtungsänderung eine Steuerzeitenänderung der Gaswechselventile (68, 70) durchgeführt werden.

Das hydraulische Stellelement (86) ist über ein nur schematisch angedeutetes elektromagnetischen Taktventil (96) entweder an eine Druckmittelquelle anschließbar oder mit mit einer Rücklaufleitung verbindbar. Somit können über das Taktventil (96) definierte Positionen des Stellelementes (86) bzw. des Spannrades (84) angefahren werden.

Im Zylinderkopf (16) und im Zylindergehäuse (14) sind in an sich bekannter Weise Kühlmittelkanäle (98, 100) eingeformt, die miteinander korrespondieren und in denen über eine nicht dargestellte Wasserpumpe im Zylinderkopf (16) Kühlmittel umwälzbar ist. Die Wasserpumpe kann dabei von dem freien Ende der Nockenwelle her angetrieben sein. Im übrigen ist der Zylinderkopf (16) soweit nicht beschrieben herkömmlicher Bauart.

Der nicht dargestellte Ansaugkrümmer sowie der Auspuffkrümmer können entweder unmittelbar an den Zylinderkopf (16) angebaut sein, wobei der Auspuffkrümmer bzw. die daran anschließende Abgasleitung zum Ausgleich der axialen Bewegung bei Verdichtungsänderungen ein flexibles Leitungsteil aufweisen muß. Abweichend dazu könnten jedoch auch Auspuffkrümmer und Ansaugkrümmer am Kurbelgehäuse (12) befestigt sein, wobei dann flexible Verbindungen unmittelbar im Bereich des Zylinderkopfes vorzusehen wären.

Das Taktventil (60) für die hydraulischen Verstellvorrichtungen (38) und das Taktventil (96) zur Verstellung der Phasenlage der Nockenwelle (76) sind an ein elektronisches Steuergerät (102) für das Motormanagement angeschlossen, über welches in nicht dargestellter Wei-

se die Zündung der Brennkraftmaschine, die Brennstoffzumessung und weitere Funktionen gesteuert werden. In dem Steuergerät (**102**) werden nach Maßgabe zumindest der Last und der Drehzahl und der Temperatur der Brennkraftmaschine auch die Verdichtungsänderung durch Ansteuerung des Taktventiles (**60**) und die Steuerung der Phasenlage der Nockenwelle (**76**) durch Ansteuerung des Taktventiles (**96**) gesteuert. Dabei werden dem Steuergerät (**102**) über einen ersten Geber (**104**) an der Stellvorrichtung (**38**) im Bereich des Schiebers (**42**) und über einen weiteren Positionsgeber (**106**) an der hydraulischen Stelleinheit (**86**) die Ist-Werte der Verstellvorrichtungen eingegeben und mit den in Kennfeldern abgelegten Soll-Werten verglichen und bei Abweichungen die Verstelleinheiten entsprechend angesteuert.

So wird beispielsweise bei einem Verschieben der Schieber (**42**) die Baueinheit Zylindergehäuse (**14**) mit Zylinderkopf (**16**) auf der Zeichnung **Fig.** 1 nach oben oder unten verschoben und dabei die Verdichtungsräume bzw. Brennräume (**26**) bei einem räumlich unveränderlichen oberen Totpunkt der Kolben vergrößert oder verkleinert. Zugleich dabei über die hydraulische Stelleinheit (**86**) das Spannrad (**84**) so verfahren, daß die Phasenlage der Nockenwelle (**76**) unverändert bleibt. Überlagert dazu werden variable Steuerzeiten zur Optimierung des Wirkungsgrades und der Abgasentgiftung gesteuert.

Die Erfindung ist nicht auf die dargestellten Ausführungsbeispiele beschränkt. So kann beispielsweise die Verstellvorrichtung (**38'**) auch so ausgebildet sein, wie dies auf der linken Seite in **Fig.** 1 der Zeichnung unter (**38'**) ausgeführt ist. Dabei sind an dem Zylinderkopf (**16**) Stellarme (**110**) angeformt, die die Gleitsteine (**48'**) tragen. Die Gleitsteine (**48'**) wiederum wirken wie vorstehend beschrieben mit den Schiebern (**42**) mit Schrägführung und den Nachstellkeilen (**50**) zusammen. Dazu ist zusätzlich eine Abdichtmanschette (**112**) erforderlich, die eine Leckage zwischen Stellarmen (**110**) und Kurbelgehäuse (**12**) bzw. den Umfangswänden (**18, 20, 22**) ausschließen, wobei eine Nockenwelle die Einlaßventile und die zweite Nockenwelle die Auslaßventile antreibt. Dabei kann auch eine zweite Phasenverstellvorrichtung vorgesehen sein, die dann unabhängig von der Stelleinheit (**86**) zur Kompensation der Phasenlage bei Verdichtungsänderung die Steuerzeiten der Einlaß-Nockenwelle verstellt. Diese Phasenverstellvorrichtung kann wiederum bekannter Bauart sein.

Patentansprüche

1. Hubkolben-Brennkraftmaschine mit veränderbarer Verdichtung, **gekennzeichnet durch** die folgenden Merkmale:
   - ein Zylindergehäuse (**14**) ist mit einem Zylinderkopf (**16**) mit Gaswechselventilen (**68,70**) verbunden,
   - das Zylindergehäuse (**14**) ist im Kurbelgehäuse (**12**) axial verschiebbar geführt,
   - es ist eine Verstellvorrichtung (**38**) vorgesehen, die von einem Steuergerät (**102**) gesteuert ist,
   - das Steuergerät (**102**) steuert die Verdichtungsänderung abhängig von der Last und/oder der Drehzahl der Brennkraftmaschine (**10**).

2. Brennkraftmaschine nach Anspruch 1, dadurch gekennzeichnet, daß die Verstellvorrichtung (**38**) durch einen oder mehrere im Kurbelgehäuse (**12**) geführte Schieber (**42**) mit Schrägführungen (**46**) gebildet ist, die mit Gleitsteinen (**48**) am Zylindergehäuse (**14**) bzw. Zylinderkopf (**16**) zusammenwirken.

3. Brennkraftmaschine nach den Ansprüchen 1 und 2, dadurch gekennzeichnet, daß die Schieber (**42**) hydraulisch über Kolben-Zylinder-Einheiten (**44**) betätigt sind, wobei die Ansteuerung durch zumindest ein elektrohydraulisches Steuerventil (**60**) bewirkt ist.

4. Brennkraftmaschine nach den Ansprüchen 1 bis 3, dadurch gekennzeichnet, daß die Schieber (**42**) durch Federn (**54**) in eine Endposition vorgespannt sind, die bei Fremdzündung der Position mit der niedrigsten Verdichtung und bei Selbstzündung der Position mit der höchsten Verdichtung entspricht.

5. Brennkraftmaschine nach Anspruch 2, dadurch gekennzeichnet, daß die Schieber (**42**) und Gleitsteine (**48**) jeweils durch einen federnd vorgespannten Nachstellkeil (**50**) spielfrei gehalten sind.

6. Vorrichtung nach einem oder mehreren der Ansprüche 1 bis 5, dadurch gekennzeichnet, daß die Führungen (**24, 26**) zwischen Kurbelgehäuse (**12**) und Zylindergehäuse (**14**) an das Druckumlauf-Schmierölsystem der Brennkraftmaschine (**10**) angeschlossen und nach außen abgedichtet sind.

7. Brennkraftmaschine nach einem der vorhergehenden Ansprüche, dadurch gekennzeichnet, daß der Zylinderkopf (**16**) und/oder das Zylindergehäuse (**14**) wassergekühlt sind und mit entsprechenden Kühlkanälen (**98, 100**) miteinander korrespondieren, wobei die Kühlwasserzu- und -abfuhr über den Zylinderkopf (**16**) erfolgt.

8. Brennkraftmaschine nach Anspruch 1, dadurch gekennzeichnet, daß die Verstellvorrichtungen (**38**) zumindest einen Positionsgeber (**104**) aufweisen, der zur Bildung einer Regelschleife mit dem Steuergerät (**102**) verbunden ist.

9. Brennkraftmaschine nach einem oder mehreren der vorhergehenden Ansprüche, wobei die Steuerung der Gaswechselventile (**68, 70**) über zumindest eine drehbar gelagerte Nockenwelle (**76**) im Zylinderkopf (**16**) erfolgt, die trieblich mit der Kurbelwelle im Kurbelgehäuse (**12**) verbunden ist, dadurch gekennzeichnet, daß im Antrieb der Nockenwelle (**76**) eine Phasenverstellvorrichtung (**84, 86**) vorgesehen ist, die die Phasenabweichungen bei Verdichtungsänderungen kompensiert.

10. Brennkraftmaschine nach Anspruch 9, dadurch gekennzeichnet, daß die Phasenverstellvorrichtung (**84, 86**) oder eine weitere Verstellvorrichtung ferner variable Steuerzeiten der Gaswechselventile (**68, 70**) abhängig von der Drehzahl n und/oder der Last α und/oder der eingestellten Verdichtung der Brennkraftmaschine (**10**) steuert.

11. Brennkraftmaschine nach Anspruch 10, dadurch gekennzeichnet, daß die Phasenverstellvorrichtungen (**84, 86**) für die Nockenwelle (**76**) mit einem Positionsgeber (**106**) kombiniert sind, der mit dem Steuergerät (**102**) verbunden ist.

Hierzu 4 Seite(n) Zeichnungen

Nummer: DE 42 11 589 A1
Int. Cl.5: F 02 D 15/04
Offenlegungstag: 14. Oktober 1993

FIG. 1

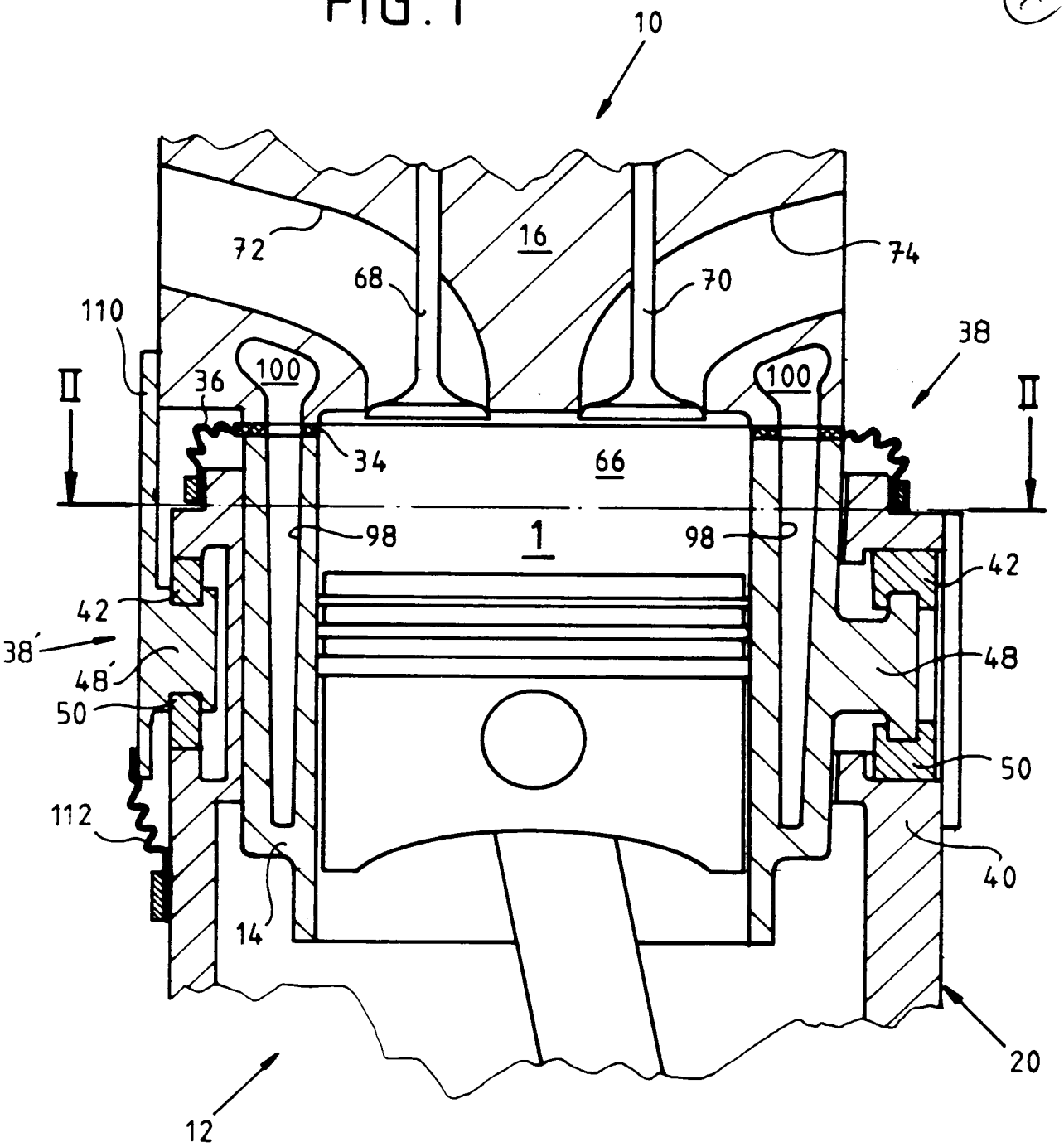

Nummer: DE 42 11 589 A1
Int. Cl.5: F 02 D 15/04
Offenlegungstag: 14. Oktober 1993

FIG. 2

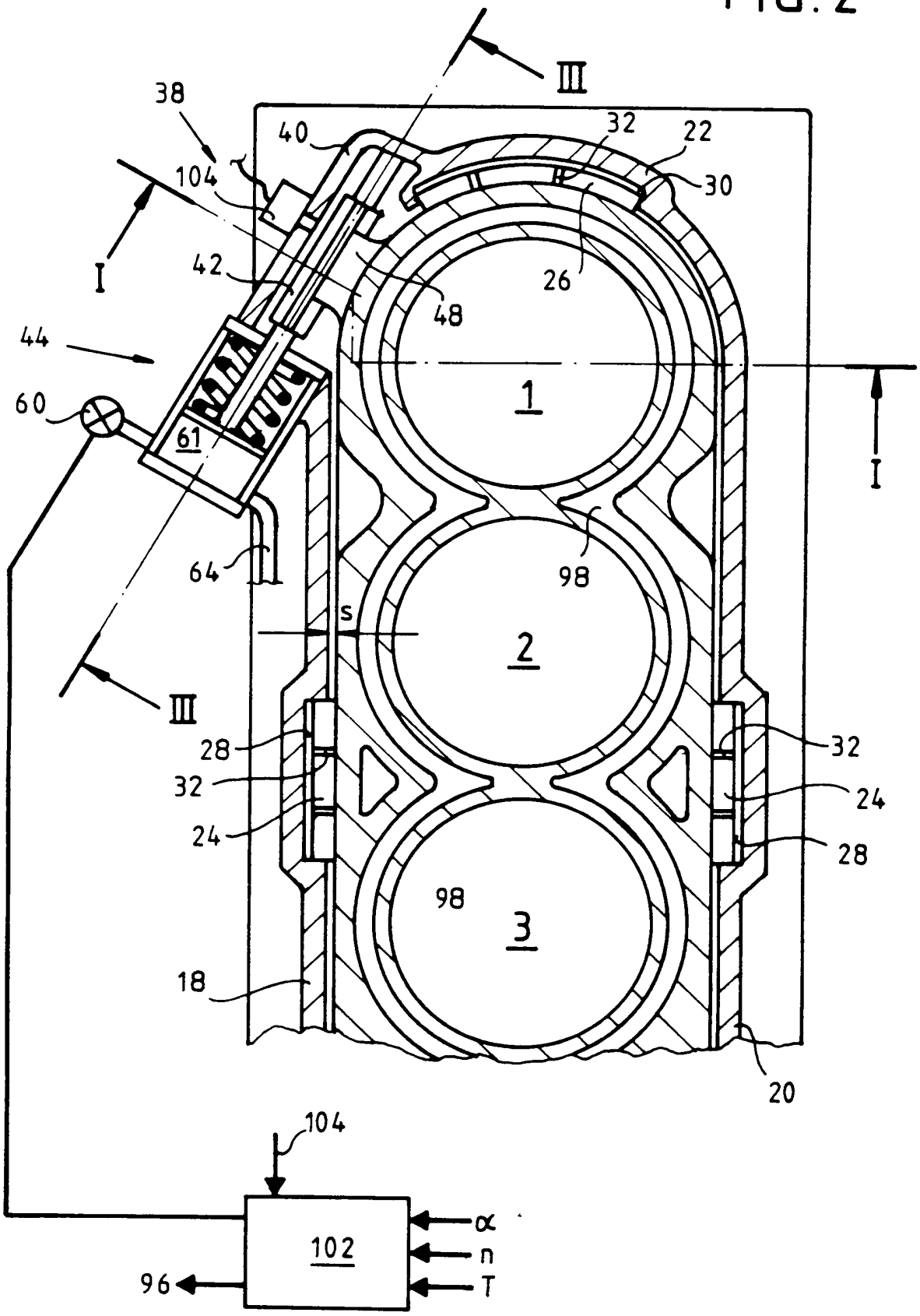

Nummer: DE 42 11 589 A1
Int. Cl.[5]: F 02 D 15/04
Offenlegungstag: 14. Oktober 1993

FIG. 3

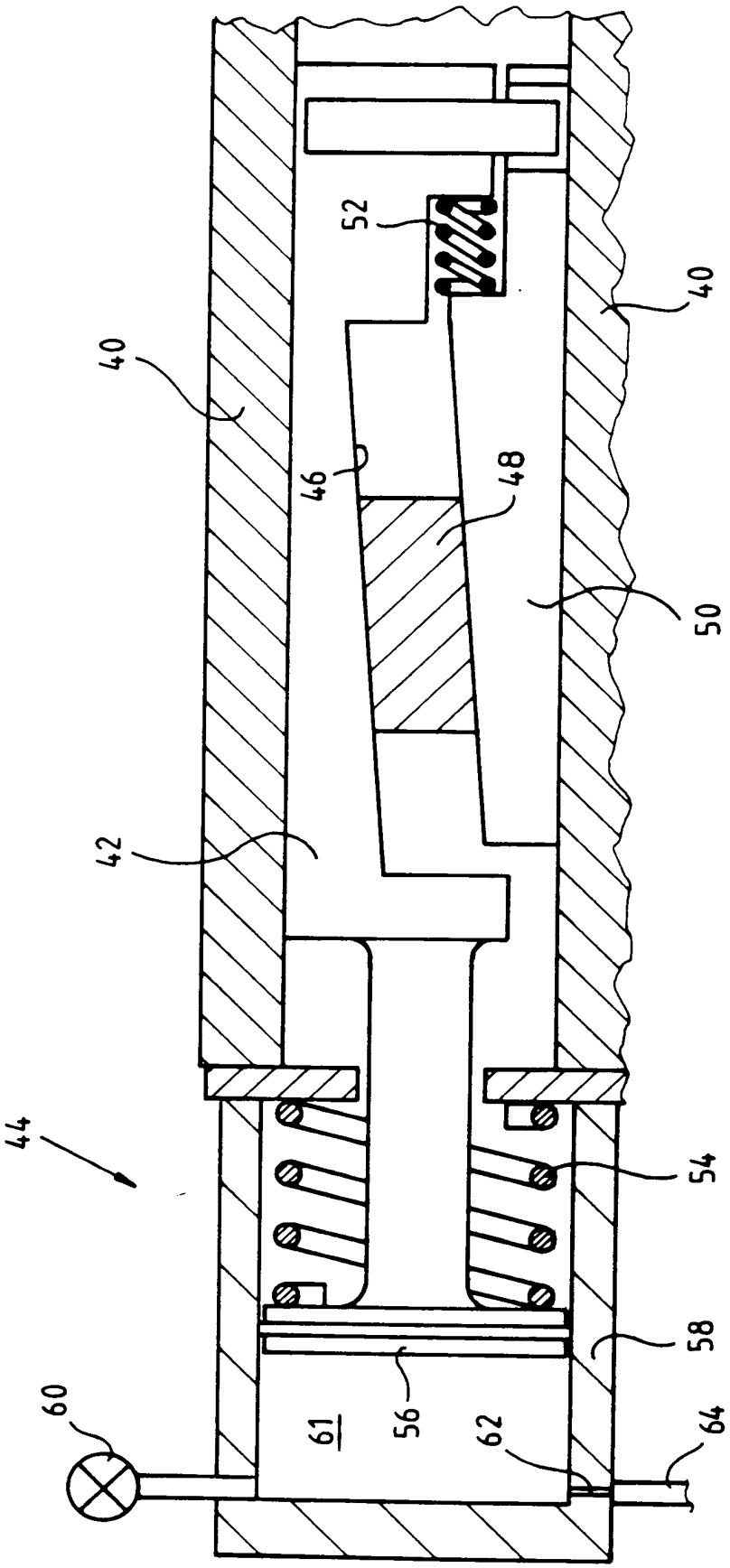

Nummer: DE 42 11 589 A1
Int. Cl.[5]: F 02 D 15/04
Offenlegungstag: 14. Oktober 1993

FIG. 4

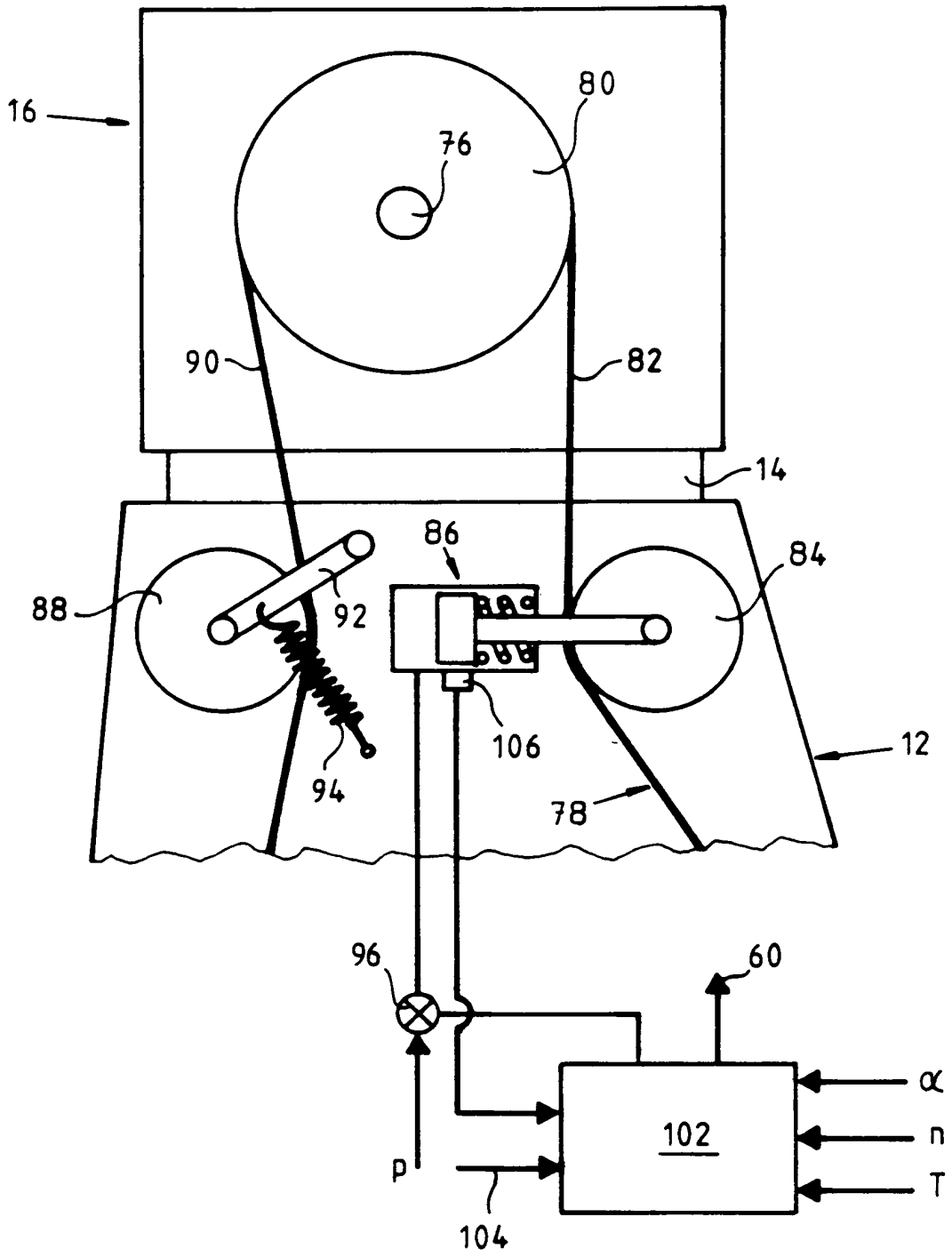

PUB-NO: DE004211589A1

DOCUMENT-IDENTIFIER: DE 4211589 A1

TITLE: IC engine with variable compression ratio - has conventional head and sliding cylinder within block displaced by hydraulically-operated sliders depending on load and rpm

PUBN-DATE: October 14, 1993

INVENTOR-INFORMATION:

NAME	COUNTRY
ROSSMANN, MICHAEL	DE

ASSIGNEE-INFORMATION:

NAME	COUNTRY
AUDI NSU AUTO UNION AG	DE

APPL-NO: DE04211589

APPL-DATE: April 7, 1992

PRIORITY-DATA: DE04211589A (April 7, 1992)

INT-CL (IPC): F02D015/04 , F02F001/16 , F02F001/38 , F01L001/04 , F01L001/34

EUR-CL (EPC): F01L001/348 , F02B075/04 , F02D015/04

ABSTRACT:

CHG DATE=19990617 STATUS=O>The IC engine has variable

compression ratio. Each cylinder is connected to a head with conventional valves but can be displaced (38) transversely within the engine block (ie, in or out relative to crankshaft). This is effected by a control device (102) and is dependant on engine load and rpm. The displacement device (38) consists of one or more sliders (42) in the block with inclined guide faces working with slide rings. The sliders are operated hydraulically by a piston-cylinder combination (44) and an electromagnetic control valve (60). They are tensioned by springs in the end positions corresponding to the lowest and highest compression ratios. ADVANTAGE - Robust, reliable and compatible with other measures for exhaust gas detoxification or increase of efficiency.

Index of Claims	Application/Control No.	Applicant(s)/Patent Under Reexamination
	12404355	PATTAKOS ET AL.
	Examiner	**Art Unit**
	NOAH KAMEN	3783

✓	Rejected	-	Cancelled	N	Non-Elected	A	Appeal
=	Allowed	÷	Restricted	I	Interference	O	Objected

☐ Claims renumbered in the same order as presented by applicant ☐ CPA ☐ T.D. ☐ R.1.47

CLAIM		DATE								
Final	Original	08/31/2011								
	1	=								
	2	=								
	3	=								
	4	=								
	5	=								
	6	=								
	7	=								
	8	=								
	9	=								
	10	=								

Search Notes	Application/Control No.	Applicant(s)/Patent Under Reexamination
	12404355	PATTAKOS ET AL.
	Examiner	**Art Unit**
	NOAH KAMEN	3783

SEARCHED

Class	Subclass	Date	Examiner
123	48R, 48C	8/31/2011	NK
	78R, 78C		

SEARCH NOTES

Search Notes	Date	Examiner
EAST	8/31/2011	NK

INTERFERENCE SEARCH

Class	Subclass	Date	Examiner
see	EAST	8/31/2011	NK

EAST Search History

EAST Search History (Prior Art)

Ref #	Hits	Search Query	DBs	Default Operator	Plurals	Time Stamp
L1	734	(123/48R,48C,78R,78C).CCLS.	US-PGPUB; USPAT; USOCR; FPRS; EPO; JPO; DERWENT; IBM_TDB	OR	OFF	2011/08/31 09:39
L2	4568	engine near30 ((variab$9 or vary $3 or adjust$3 or adjustab$9 or chang$6 or select$3 or selectab$9 or control$4) near3 compression near2 ratio)	US-PGPUB; USPAT; USOCR; FPRS; EPO; JPO; DERWENT; IBM_TDB	OR	ON	2011/08/31 09:40
L3	5105	1 or 2	US-PGPUB; USPAT; USOCR; FPRS; EPO; JPO; DERWENT; IBM_TDB	OR	ON	2011/08/31 09:40
L4	5250	(compression or ratio) near300 (cylinderhead or head) near100 (eccentr$9 or sliders or displac$3 or displacement or height)	US-PGPUB; USPAT; USOCR; FPRS; EPO; JPO; DERWENT; IBM_TDB	OR	ON	2011/08/31 09:45
L5	107	3 and 4	US-PGPUB; USPAT; USOCR; FPRS; EPO; JPO; DERWENT; IBM_TDB	OR	ON	2011/08/31 09:45

8/31/2011 10:32:39 AM
C:\Documents and Settings\NKamen\My Documents\EAST\Workspaces\default51811.wsp

UNITED STATES PATENT AND TRADEMARK OFFICE

UNITED STATES DEPARTMENT OF COMMERCE
United States Patent and Trademark Office
Address: COMMISSIONER FOR PATENTS
P.O. Box 1450
Alexandria, Virginia 22313-1450
www.uspto.gov

APPLICATION NUMBER	FILING OR 371(C) DATE	FIRST NAMED APPLICANT	ATTY. DOCKET NO./TITLE
12/404,355	03/16/2009	Manousos Pattakos	

CONFIRMATION NO. 1641

PUBLICATION NOTICE

OC000000043534075

Manousos Pattakos
Lampraki 406
PC 18452 GR
Nikea Piraeus, 18452
GREECE

Title:VARIABLE COMPRESSION RATIO ENGINE

Publication No.US-2010-0229834-A1
Publication Date:09/16/2010

NOTICE OF PUBLICATION OF APPLICATION

The above-identified application will be electronically published as a patent application publication pursuant to 37 CFR 1.211, et seq. The patent application publication number and publication date are set forth above.

The publication may be accessed through the USPTO's publically available Searchable Databases via the Internet at www.uspto.gov. The direct link to access the publication is currently http://www.uspto.gov/patft/.

The publication process established by the Office does not provide for mailing a copy of the publication to applicant. A copy of the publication may be obtained from the Office upon payment of the appropriate fee set forth in 37 CFR 1.19(a)(1). Orders for copies of patent application publications are handled by the USPTO's Office of Public Records. The Office of Public Records can be reached by telephone at (703) 308-9726 or (800) 972-6382, by facsimile at (703) 305-8759, by mail addressed to the United States Patent and Trademark Office, Office of Public Records, Alexandria, VA 22313-1450 or via the Internet.

In addition, information on the status of the application, including the mailing date of Office actions and the dates of receipt of correspondence filed in the Office, may also be accessed via the Internet through the Patent Electronic Business Center at www.uspto.gov using the public side of the Patent Application Information and Retrieval (PAIR) system. The direct link to access this status information is currently http://pair.uspto.gov/. Prior to publication, such status information is confidential and may only be obtained by applicant using the private side of PAIR.

Further assistance in electronically accessing the publication, or about PAIR, is available by calling the Patent Electronic Business Center at 1-866-217-9197.

Office of Data Managment, Application Assistance Unit (571) 272-4000, or (571) 272-4200, or 1-888-786-0101

UNITED STATES PATENT AND TRADEMARK OFFICE

UNITED STATES DEPARTMENT OF COMMERCE
United States Patent and Trademark Office
Address: COMMISSIONER FOR PATENTS
P.O. Box 1450
Alexandria, Virginia 22313-1450
www.uspto.gov

APPLICATION NUMBER	FILING or 371(c) DATE	GRP ART UNIT	FIL FEE REC'D	ATTY.DOCKET.NO	TOT CLAIMS	IND CLAIMS
12/404,355	03/16/2009	3741	462		10	3

CONFIRMATION NO. 1641

REPLACEMENT FILING RECEIPT

OC000000042204833

Manousos Pattakos
Lampraki 406
PC 18452 GR
Nikea Piraeus, 18452
GREECE

Date Mailed: 06/21/2010

Receipt is acknowledged of this non-provisional patent application. The application will be taken up for examination in due course. Applicant will be notified as to the results of the examination. Any correspondence concerning the application must include the following identification information: the U.S. APPLICATION NUMBER, FILING DATE, NAME OF APPLICANT, and TITLE OF INVENTION. Fees transmitted by check or draft are subject to collection. Please verify the accuracy of the data presented on this receipt. **If an error is noted on this Filing Receipt, please submit a written request for a Filing Receipt Correction. Please provide a copy of this Filing Receipt with the changes noted thereon. If you received a "Notice to File Missing Parts" for this application, please submit any corrections to this Filing Receipt with your reply to the Notice. When the USPTO processes the reply to the Notice, the USPTO will generate another Filing Receipt incorporating the requested corrections**

Applicant(s)

Manousos Pattakos, Nikea Piraeus, GREECE;
Chrysavgi Pattakou, Aharnai Athens, GREECE;
Emmanouel Pattakos, Nikea Piraeus, GREECE;

Power of Attorney: None

Domestic Priority data as claimed by applicant

Foreign Applications

Permission to Access - A proper **Authorization to Permit Access to Application by Participating Offices** (PTO/SB/39 or its equivalent) has been received by the USPTO.

If Required, Foreign Filing License Granted: 03/27/2009

The country code and number of your priority application, to be used for filing abroad under the Paris Convention, is **US 12/404,355**

Projected Publication Date: 09/16/2010

Non-Publication Request: No

Early Publication Request: No
**** SMALL ENTITY ****

Title

VARIABLE COMPRESSION RATIO ENGINE

Preliminary Class

123

PROTECTING YOUR INVENTION OUTSIDE THE UNITED STATES

Since the rights granted by a U.S. patent extend only throughout the territory of the United States and have no effect in a foreign country, an inventor who wishes patent protection in another country must apply for a patent in a specific country or in regional patent offices. Applicants may wish to consider the filing of an international application under the Patent Cooperation Treaty (PCT). An international (PCT) application generally has the same effect as a regular national patent application in each PCT-member country. The PCT process **simplifies** the filing of patent applications on the same invention in member countries, but **does not result** in a grant of "an international patent" and does not eliminate the need of applicants to file additional documents and fees in countries where patent protection is desired.

Almost every country has its own patent law, and a person desiring a patent in a particular country must make an application for patent in that country in accordance with its particular laws. Since the laws of many countries differ in various respects from the patent law of the United States, applicants are advised to seek guidance from specific foreign countries to ensure that patent rights are not lost prematurely.

Applicants also are advised that in the case of inventions made in the United States, the Director of the USPTO must issue a license before applicants can apply for a patent in a foreign country. The filing of a U.S. patent application serves as a request for a foreign filing license. The application's filing receipt contains further information and guidance as to the status of applicant's license for foreign filing.

Applicants may wish to consult the USPTO booklet, "General Information Concerning Patents" (specifically, the section entitled "Treaties and Foreign Patents") for more information on timeframes and deadlines for filing foreign patent applications. The guide is available either by contacting the USPTO Contact Center at 800-786-9199, or it can be viewed on the USPTO website at http://www.uspto.gov/web/offices/pac/doc/general/index.html.

For information on preventing theft of your intellectual property (patents, trademarks and copyrights), you may wish to consult the U.S. Government website, http://www.stopfakes.gov. Part of a Department of Commerce initiative, this website includes self-help "toolkits" giving innovators guidance on how to protect intellectual property in specific countries such as China, Korea and Mexico. For questions regarding patent enforcement issues, applicants may call the U.S. Government hotline at 1-866-999-HALT (1-866-999-4158).

LICENSE FOR FOREIGN FILING UNDER

Title 35, United States Code, Section 184

Title 37, Code of Federal Regulations, 5.11 & 5.15

GRANTED

The applicant has been granted a license under 35 U.S.C. 184, if the phrase "IF REQUIRED, FOREIGN FILING LICENSE GRANTED" followed by a date appears on this form. Such licenses are issued in all applications where the conditions for issuance of a license have been met, regardless of whether or not a license may be required as

set forth in 37 CFR 5.15. The scope and limitations of this license are set forth in 37 CFR 5.15(a) unless an earlier license has been issued under 37 CFR 5.15(b). The license is subject to revocation upon written notification. The date indicated is the effective date of the license, unless an earlier license of similar scope has been granted under 37 CFR 5.13 or 5.14.

This license is to be retained by the licensee and may be used at any time on or after the effective date thereof unless it is revoked. This license is automatically transferred to any related applications(s) filed under 37 CFR 1.53(d). This license is not retroactive.

The grant of a license does not in any way lessen the responsibility of a licensee for the security of the subject matter as imposed by any Government contract or the provisions of existing laws relating to espionage and the national security or the export of technical data. Licensees should apprise themselves of current regulations especially with respect to certain countries, of other agencies, particularly the Office of Defense Trade Controls, Department of State (with respect to Arms, Munitions and Implements of War (22 CFR 121-128)); the Bureau of Industry and Security, Department of Commerce (15 CFR parts 730-774); the Office of Foreign AssetsControl, Department of Treasury (31 CFR Parts 500+) and the Department of Energy.

NOT GRANTED

No license under 35 U.S.C. 184 has been granted at this time, if the phrase "IF REQUIRED, FOREIGN FILING LICENSE GRANTED" DOES NOT appear on this form. Applicant may still petition for a license under 37 CFR 5.12, if a license is desired before the expiration of 6 months from the filing date of the application. If 6 months has lapsed from the filing date of this application and the licensee has not received any indication of a secrecy order under 35 U.S.C. 181, the licensee may foreign file the application pursuant to 37 CFR 5.15(b).

1/1

RECEIVED
CENTRAL FAX CENTER

JUN 15 2010

Appl. No: 12/404,355
Filing Date: 03/16/2009

Code: PD.TO.AUTH
Document Description: Authorization to access Appl. by Trilateral Office

PTO/SB/39 (07-09)
Approved for use through 07/31/2012. OMB 0651-0031
U.S. Patent and Trademark Office; U.S. DEPARTMENT OF COMMERCE
Under the Paperwork Reduction Act of 1995, no persons are required to respond to a collection of information unless it displays a valid OMB control number.

AUTHORIZATION TO PERMIT ACCESS TO APPLICATION BY PARTICIPATING OFFICES

Send completed form to: Commissioner for Patents
P.O. Box 1450, Alexandria, VA 22313-1450

COMPLETE IF KNOWN	
Application Number	12/404,355
Filing Date	03/16/2009
First Named Inventor	Manousos Pattakos
Attorney Docket Number	
Title (Required)	VARIABLE COMPRESSION RATIO ENGINE

The undersigned hereby grants the USPTO authority to provide the European Patent Office (EPO), the Japan Patent Office (JPO), the Korean Intellectual Property Office (KIPO), the World Intellectual Property Office (WIPO), and any other intellectual property offices in which a foreign application claiming priority to the above-identified patent application is filed access to the above-identified patent application. See 37 CFR 1.14(c) and (h).

In accordance with 37 CFR 1.14(h)(3), access will be provided to a copy of the above-identified application with respect to: 1) the above-identified patent application-as-filed; 2) any foreign application to which the above-identified patent application claims priority under 35 U.S.C. 119(a)-(d) if a copy of the foreign application that satisfies the certified copy requirement of 37 CFR 1.55 has been filed in the above-identified patent application; and 3) any U.S. application-as-filed from which benefit is sought in the above-identified patent application.

In accordance with 37 CFR 1.14(c), access may be provided to information concerning the date of filing the Authorization to Permit Access to Application by Participating Offices.

This written authorization should be submitted prior to the filing of a subsequent foreign application, in which priority is claimed to the above-identified patent application, with any intellectual property office (e.g., the EPO, JPO, KIPO, or DAS Accessing Office). However, if applicant does not wish the EPO, JPO, KIPO, WIPO, or other intellectual property office in which a foreign application claiming priority to the above-identified patent application is filed to have access to the above-identified patent application, this written authorization should not be filed.

No fee will be charged under 37 CFR 1.19(b)(1) for providing a participating intellectual property office with an electronic copy of the above-identified patent application.

This form must be signed by an authorized party in accordance with 37 CFR 1.14(c).

Signature	06/15/2010 Date
Manousos Pattakos Printed or Typed Name	030-210-4934402 Telephone Number
First Applicant and Inventor Title	Registration Number, if applicable

This collection of information is required by 37 CFR 1.14(h). The information is required to obtain or retain a benefit by the public which is to file (and by the USPTO to process an application). Confidentiality is governed by 35 U.S.C. 122 and 37 CFR 1.11 and 1.14. This collection is estimated to take 6 minutes to complete, including gathering, preparing, and submitting the completed application form to the USPTO. Time will vary depending upon the individual case. Any comments on the amount of time you require to complete this form and/or suggestions for reducing this burden, should be sent to the Chief Information Officer, U.S. Patent and Trademark Office, U.S. Department of Commerce, P.O. Box 1450, Alexandria, VA 22313-1450. DO NOT SEND FEES OR COMPLETED FORMS TO THIS ADDRESS. SEND TO: Commissioner for Patents, P.O. Box 1450, Alexandria, VA 22313-1450.

If you need assistance in completing the form, call 1-800-PTO-9199 and select option 2.

UNITED STATES PATENT AND TRADEMARK OFFICE

UNITED STATES DEPARTMENT OF COMMERCE
United States Patent and Trademark Office
Address: COMMISSIONER FOR PATENTS
P.O. Box 1450
Alexandria, Virginia 22313-1450
www.uspto.gov

APPLICATION NUMBER	FILING or 371(c) DATE	GRP ART UNIT	FIL FEE REC'D	ATTY.DOCKET.NO	TOT CLAIMS	IND CLAIMS
12/404,355	03/16/2009	3741	462		10	3

CONFIRMATION NO. 1641

FILING RECEIPT

OC000000035215595

Manousos Pattakos
Lampraki 406
PC 18452 GR
Nikea Piraeus, 18452
GREECE

Date Mailed: 03/31/2009

Receipt is acknowledged of this non-provisional patent application. The application will be taken up for examination in due course. Applicant will be notified as to the results of the examination. Any correspondence concerning the application must include the following identification information: the U.S. APPLICATION NUMBER, FILING DATE, NAME OF APPLICANT, and TITLE OF INVENTION. Fees transmitted by check or draft are subject to collection. Please verify the accuracy of the data presented on this receipt. **If an error is noted on this Filing Receipt, please submit a written request for a Filing Receipt Correction. Please provide a copy of this Filing Receipt with the changes noted thereon. If you received a "Notice to File Missing Parts" for this application, please submit any corrections to this Filing Receipt with your reply to the Notice. When the USPTO processes the reply to the Notice, the USPTO will generate another Filing Receipt incorporating the requested corrections**

Applicant(s)

Manousos Pattakos, Nikea Piraeus, GREECE;
Chrysavgi Pattakou, Aharnai Athens, GREECE;
Emmanouel Pattakos, Nikea Piraeus, GREECE;

Power of Attorney: None

Domestic Priority data as claimed by applicant

Foreign Applications

If Required, Foreign Filing License Granted: 03/27/2009

The country code and number of your priority application, to be used for filing abroad under the Paris Convention, is **US 12/404,355**

Projected Publication Date: 09/16/2010

Non-Publication Request: No

Early Publication Request: No
**** SMALL ENTITY ****

Title

VARIABLE COMPRESSION RATIO ENGINE

Preliminary Class

123

PROTECTING YOUR INVENTION OUTSIDE THE UNITED STATES

Since the rights granted by a U.S. patent extend only throughout the territory of the United States and have no effect in a foreign country, an inventor who wishes patent protection in another country must apply for a patent in a specific country or in regional patent offices. Applicants may wish to consider the filing of an international application under the Patent Cooperation Treaty (PCT). An international (PCT) application generally has the same effect as a regular national patent application in each PCT-member country. The PCT process **simplifies** the filing of patent applications on the same invention in member countries, but **does not result** in a grant of "an international patent" and does not eliminate the need of applicants to file additional documents and fees in countries where patent protection is desired.

Almost every country has its own patent law, and a person desiring a patent in a particular country must make an application for patent in that country in accordance with its particular laws. Since the laws of many countries differ in various respects from the patent law of the United States, applicants are advised to seek guidance from specific foreign countries to ensure that patent rights are not lost prematurely.

Applicants also are advised that in the case of inventions made in the United States, the Director of the USPTO must issue a license before applicants can apply for a patent in a foreign country. The filing of a U.S. patent application serves as a request for a foreign filing license. The application's filing receipt contains further information and guidance as to the status of applicant's license for foreign filing.

Applicants may wish to consult the USPTO booklet, "General Information Concerning Patents" (specifically, the section entitled "Treaties and Foreign Patents") for more information on timeframes and deadlines for filing foreign patent applications. The guide is available either by contacting the USPTO Contact Center at 800-786-9199, or it can be viewed on the USPTO website at http://www.uspto.gov/web/offices/pac/doc/general/index.html.

For information on preventing theft of your intellectual property (patents, trademarks and copyrights), you may wish to consult the U.S. Government website, http://www.stopfakes.gov. Part of a Department of Commerce initiative, this website includes self-help "toolkits" giving innovators guidance on how to protect intellectual property in specific countries such as China, Korea and Mexico. For questions regarding patent enforcement issues, applicants may call the U.S. Government hotline at 1-866-999-HALT (1-866-999-4158).

LICENSE FOR FOREIGN FILING UNDER

Title 35, United States Code, Section 184

Title 37, Code of Federal Regulations, 5.11 & 5.15

GRANTED

The applicant has been granted a license under 35 U.S.C. 184, if the phrase "IF REQUIRED, FOREIGN FILING LICENSE GRANTED" followed by a date appears on this form. Such licenses are issued in all applications where the conditions for issuance of a license have been met, regardless of whether or not a license may be required as

set forth in 37 CFR 5.15. The scope and limitations of this license are set forth in 37 CFR 5.15(a) unless an earlier license has been issued under 37 CFR 5.15(b). The license is subject to revocation upon written notification. The date indicated is the effective date of the license, unless an earlier license of similar scope has been granted under 37 CFR 5.13 or 5.14.

This license is to be retained by the licensee and may be used at any time on or after the effective date thereof unless it is revoked. This license is automatically transferred to any related applications(s) filed under 37 CFR 1.53(d). This license is not retroactive.

The grant of a license does not in any way lessen the responsibility of a licensee for the security of the subject matter as imposed by any Government contract or the provisions of existing laws relating to espionage and the national security or the export of technical data. Licensees should apprise themselves of current regulations especially with respect to certain countries, of other agencies, particularly the Office of Defense Trade Controls, Department of State (with respect to Arms, Munitions and Implements of War (22 CFR 121-128)); the Bureau of Industry and Security, Department of Commerce (15 CFR parts 730-774); the Office of Foreign AssetsControl, Department of Treasury (31 CFR Parts 500+) and the Department of Energy.

NOT GRANTED

No license under 35 U.S.C. 184 has been granted at this time, if the phrase "IF REQUIRED, FOREIGN FILING LICENSE GRANTED" DOES NOT appear on this form. Applicant may still petition for a license under 37 CFR 5.12, if a license is desired before the expiration of 6 months from the filing date of the application. If 6 months has lapsed from the filing date of this application and the licensee has not received any indication of a secrecy order under 35 U.S.C. 181, the licensee may foreign file the application pursuant to 37 CFR 5.15(b).

VARIABLE COMPRESSION RATIO ENGINE

In the prior art, like SAAB's PCT/SE91/818 and Toyota's US7,047,917, a pair of connecting shafts is arranged at the two sides of the cylinder block, laterally, to connect the upper and lower sections of the engine. The rotation of a control shaft displaces the cylinder head relative to the crankcase to vary the compression ratio. The inevitable long distance between the two connecting shafts generates heavy bending loads, flexing and noise, making the reinforcement of the two sections inevitable.

In this patent, a variable compression ratio internal combustion engine comprises a base section and a movable section slidably fitted to each other.

The movable section comprises a cylinder head and a cylinder block.

The base section comprises a crankcase, or a casing in general. There are projections of the crankcase into the cylinder head to provide supports for receiving the forces applied to the cylinder head from the high-pressure gas into the combustion chamber. These projections comprise pillars starting near the crankshaft base bearings and enter, through proper openings, into the cylinder head, they also comprise bridges firmly interconnecting the free ends of the pillars to strengthen the structure and to provide supports to a control shaft.

In the conventional cylinder block the narrowing between neighboring cylinders is an available free area for the pillars. Bearing the cylinder head, the pillars are loaded purely in tension and connect, as directly as desirable, the tightening screws of the crankshaft bearing caps to the tightening screws of the bridges. Limited to the bridges, the bending loads are no heavier than those

in the crankshaft bearing caps, i.e. there is nothing special regarding the size or the design of the bridges.
The control shaft has eccentric pins or cams or toothed gears etc.
The crankcase bears the control shaft and the control shaft bears the cylinder head, longitudinally.
The architecture of the crankcase projections fits the direction of the gas pressure forces on the cylinder head, resulting in pure tensile loading of the pillars.
There are sliders on the cylinder block, at the height where the piston skirts thrust the cylinder walls. These sliders thrust on respective crankcase sliders in order to pass the thrust loads of the cylinder block onto the crankcase. These loads are several times weaker than those on the cylinder head. The pillars of the crankcase projections can serve as the crankcase sliders, too. The bridging of the free ends of the pillars and the small distance of the thrust loads from the crankcase side of the pillars enables the structure to withstand heavy thrust loads.
The cylinder block, free from transferring to the crankcase the forces applied on the cylinder head, becomes lighter and distortion free. The forces tending to separate the cylinder head from the cylinder are small enabling the reliable sealing of the combustion chamber. The union of the cylinder head with the cylinder block in a single piece is a further option, better as regards the cooling, the simplicity, the robustness, the cost and the reliability.
The control shaft is pivotally mounted either on the cylinder head or on the crankcase projections. The control shaft supported on the crankcase projection directly, or by connecting means like connecting rods or sliders, receives the forces applied on the cylinder head and supports the cylinder head. The angular

displacement of the control shaft varies the compression ratio by displacing the cylinder head relative to the crankshaft.

Figs 1 to 9 show a first embodiment.

Fig 1 shows the engine partly sliced.

Fig 2 shows the base section and the movable section separated, with the control shaft between them.

Fig 3 shows the movable section disassembled and the bearings for mounting the control shaft.

Fig 4 shows the control shaft and the bridges of the pillars.

Fig 5 shows the crankcase, the projections of the crankcase and the parts for the connection of the crankcase to the control shaft.

Fig 6 shows the control shaft, the lower bearings of the crankshaft, the bridges of the pillars and the straight way for passing the loads.

Fig 7 shows the robust, yet compact and light, structure of the crankcase.

Fig 8 shows sections of the engine.

Fig 9 shows the section D-D of Fig 8 exploded.

Figs 10 to 13 show a second embodiment.

Fig 10 shows the engine partly sliced, a bearing cup from the other side, the timing belt and the sprockets.

Fig 11 shows the crankshaft, the connecting rods and the pistons of the engine, the control shaft, the bridges and the direct passing of the loads from the cylinder head, through the pillars, to the lower bearings of the crankshaft.

Fig 12 shows at top the bridges and the control shaft, at middle the cylinder head and at bottom the crankcase with its pillars.

Fig 13 shows details of the control shaft, the bridges, the sliders and the roller bearings.

Fig 14 shows a variation of the second embodiment.

Fig 15 shows another variation of the second embodiment.
In a first embodiment, on top of the cylinder head 9 of the movable section 7, a control shaft 13 is pivotally mounted in the space between the two camshafts, leaving area for a centrally located spark in the combustion chamber 12.
The crankcase 2, of the base section 1, has projections 6 comprising pillars and bridges.
The control shaft has eccentric pins 14.
The connecting rods 15 are pivotally mounted at one end on said eccentric pins 14 and at the other end on the crankcase projections 6.
The movable section 7 is slidably fitted on the crankcase 2 by means of the cylinder sliders 10 and the crankcase sliders 5. The trust loads of the cylinders pass through the cylinder sliders 10 to the crankcase 2.
The angular displacement of the control shaft displaces the cylinder head, relative to the crankshaft, varying the compression ratio. The control shaft receives the forces applied to the cylinder head and passes them, through the connecting rods 15, to the bridges, then to the pillars and finally to the lower crankcase.
Compared to the gas pressure force carried by the connecting rod to the crankshaft 4, each pillar carries less than a quarter and each short connecting rod 15 carries less than half.
In a second embodiment, the control shaft 13 is pivotally mounted on the cylinder head by means of needle roller bearings and has eccentric pins 14. First slider means 16 are pivotally mounted on the eccentric pins 14, they are also slidably fitted into second slider means 17 formed in the bridges of the free ends of the pillars. The angular displacement of the control shaft 13 displaces the cylinder

head 9 relative to the crankcase varying the compression ratio. All heavy loaded pivot joints and sliders can be of the needle roller bearing type to avoid lubrication issues.

The geometry of the arrangement of the timing belt shown in Fig 10 can keep substantially unchanged the timing between the crankshaft and the camshafts. The roller just below the two camshaft sprockets has a shaft secured on the base section. The other roller, near the crankshaft, keeps the timing belt tight.

In a variation of the second embodiment, Fig 14, cams have replaced the eccentric pins of the control shaft. Under the camming action of said cams on the pillar bridges, the cylinder head is displaced and the compression ratio varies.

In another variation of the second embodiment, Fig 15, toothed gears have replaced the eccentric pins of the control shaft. The toothed gears are meshed to rack gears formed on the bridges.

The proper design of the crankcase projections neither restricts the size of the intake and exhausts ports, as compared to the conventional engine, nor restricts the coolant passage areas 20 along the cylinder head.

The sealing is easy, for instance by means of a rubber seal 18 inserted into a groove formed in the crankcase and being in touch to a properly shaped surface 19 around the cylinder head.

The angular displacement of the control shaft can be manual, mechanical, hydraulic, electrical etc. Knock sensors and feedback control enables HCCI operation.

CLAIMS

What is claimed is:

1. A variable compression ratio internal combustion engine comprising at least:

a base section (1), said base section (1) comprising a crankcase (2), said crankcase (2) comprising bearings (3), said base section (1) comprising a crankshaft (4) rotatably mounted on said crankcase (2) by means of said bearings (3) to rotate therein, said crankcase (2) comprising crankcase sliders (5), said crankcase (2) comprising crankcase projections (6);

a movable section (7), said movable section (7) comprising a cylinder (8), said movable section (7) comprising a cylinder head (9), said movable section (7) comprising cylinder sliders (10), said movable section (7) being slidably fitted on said crankcase (2) by means of said crankcase sliders (5) and said cylinder sliders (10), said cylinder sliders (10) supported on said crankcase sliders (5) pass the thrust loads of said cylinder (8) to said crankcase (2);

a working piston (11) slidably fitted into said cylinder (8);

a combustion chamber (12) formed between said cylinder (8), said working piston (11) and said cylinder head (9);

a control shaft (13), said control shaft (13) being pivotally mounted into said cylinder head (9), said control shaft (13) comprising eccentric pins (14);

connecting rods (15), said connecting rods (15) being pivotally mounted, at one end, on said eccentric pins (14), said connecting rods (15) being, at their other ends, pivotally mounted on said crankcase projections (6),

the control shaft (13), supported on said crankcase projections (6), is bearing the cylinder head (9) and the forces from the combustion,
the angular displacement of the control shaft (13) varies the compression ratio by displacing the cylinder head (9) relative to the crankcase (2) via the connecting rods (15).

2. A variable compression ratio internal combustion engine comprising at least:
a base section (1), said base section (1) comprising a crankcase (2), said crankcase (2) comprising bearings (3), said base section (1) comprising a crankshaft (4) rotatably mounted on said crankcase (2) by means of said bearings (3) to rotate therein, said crankcase (2) comprising crankcase sliders (5), said crankcase (2) comprising crankcase projections (6);
a movable section (7), said movable section (7) comprising a cylinder (8), said movable section (7) comprising a cylinder head (9), said movable section (7) comprising cylinder sliders (10), said movable section (7) being slidably fitted on said crankcase (2) by means of said crankcase sliders (5) and said cylinder sliders (10);
a working piston (11) slidably fitted into said cylinder (8);
a combustion chamber (12) formed between said cylinder (8), said working piston (11) and said cylinder head (9);
a control shaft (13),
the combustion chamber (12) is arranged between the control shaft (13) and the crankshaft (4),
the control shaft (13) is linked to the cylinder head (9), the control shaft (13) is linked to the crankcase projections (6),

the control shaft (13), supported on the crankcase projections (6), is bearing the cylinder head (9) receiving the forces from the combustion,
the angular displacement of the control shaft (13) varies the compression ratio by displacing the cylinder head (9) relative to the crankcase (2).

3. A variable compression ratio internal combustion engine according claim 2, wherein:
the control shaft (13) comprises eccentric pins (14),
the control shaft (13) is pivotally mounted on the cylinder head (9),
the control shaft (13) is linked to the crankcase projections (6) by means of first slider means (16) and of second slider means (17),
said first slider means (16) are pivotally mounted on said eccentric pins (14), said first slider means (16) and said second slider means (17) being slidably fitted to each other.

4. A variable compression ratio internal combustion engine according to claim 2, wherein the control shaft is pivotally mounted on said cylinder head (7).

5. A variable compression ratio internal combustion engine according to claim 2, wherein the control shaft is pivotally mounted on said crankcase projections (6).

6. A variable compression ratio internal combustion engine according to claim 2, wherein there are more than one control shafts bearing the cylinder head.

7. A variable compression ratio internal combustion engine according to claim 2, wherein the control shaft comprises cams, the camming action of said cams displaces the cylinder head relative to the crankcase to vary the compression ratio.

8. A variable compression ratio internal combustion engine according to claim 2, wherein the control shaft comprises toothed gears, the toothed gears meshing with rack gears to displace the cylinder head relative to the crankcase.

9. A variable compression ratio internal combustion engine according to claim 2, wherein at least one of said pivotal joints and sliders comprises roller bearings.

10. A variable compression ratio internal combustion engine comprising at least:

a casing;

a cylinder, said casing and said cylinder are slidably fitted to each other;

a cylinder head secured on said cylinder;

a control shaft disposed into said cylinder head,

the control shaft bears substantially the entire load applied on the cylinder head,

the angular displacement of the control shaft varies the compression ratio by displacing the cylinder head relative to the casing.

ABSTRACT

To control the compression ratio of an internal combustion engine, the cylinder block is slidably fitted to the crankcase, projections from the crankcase extend into the cylinder head to support a control shaft bearing the cylinder head. The angular displacement of the control shaft varies the compression ratio by displacing the cylinder head relative to the crankcase.

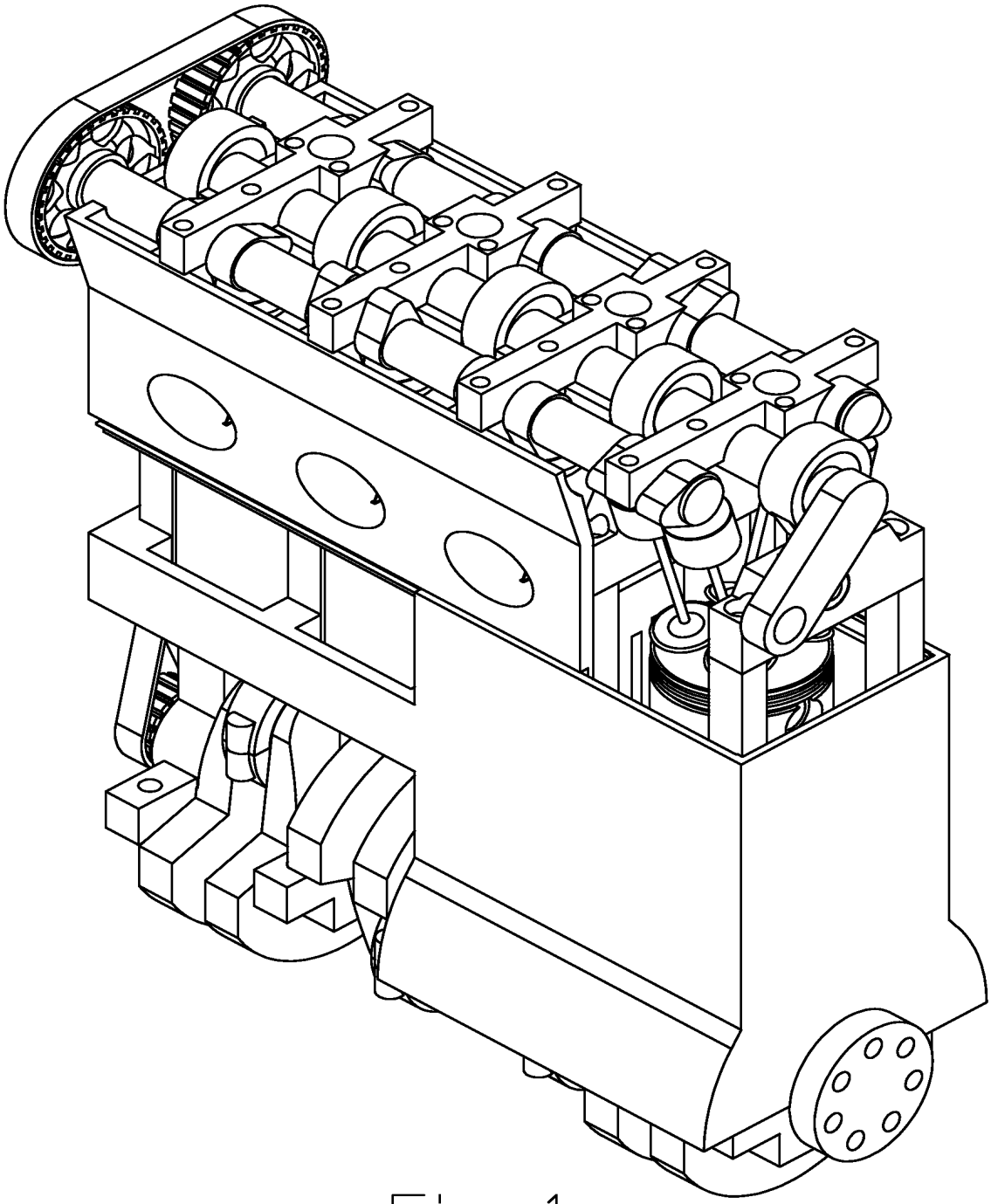

Fig 1

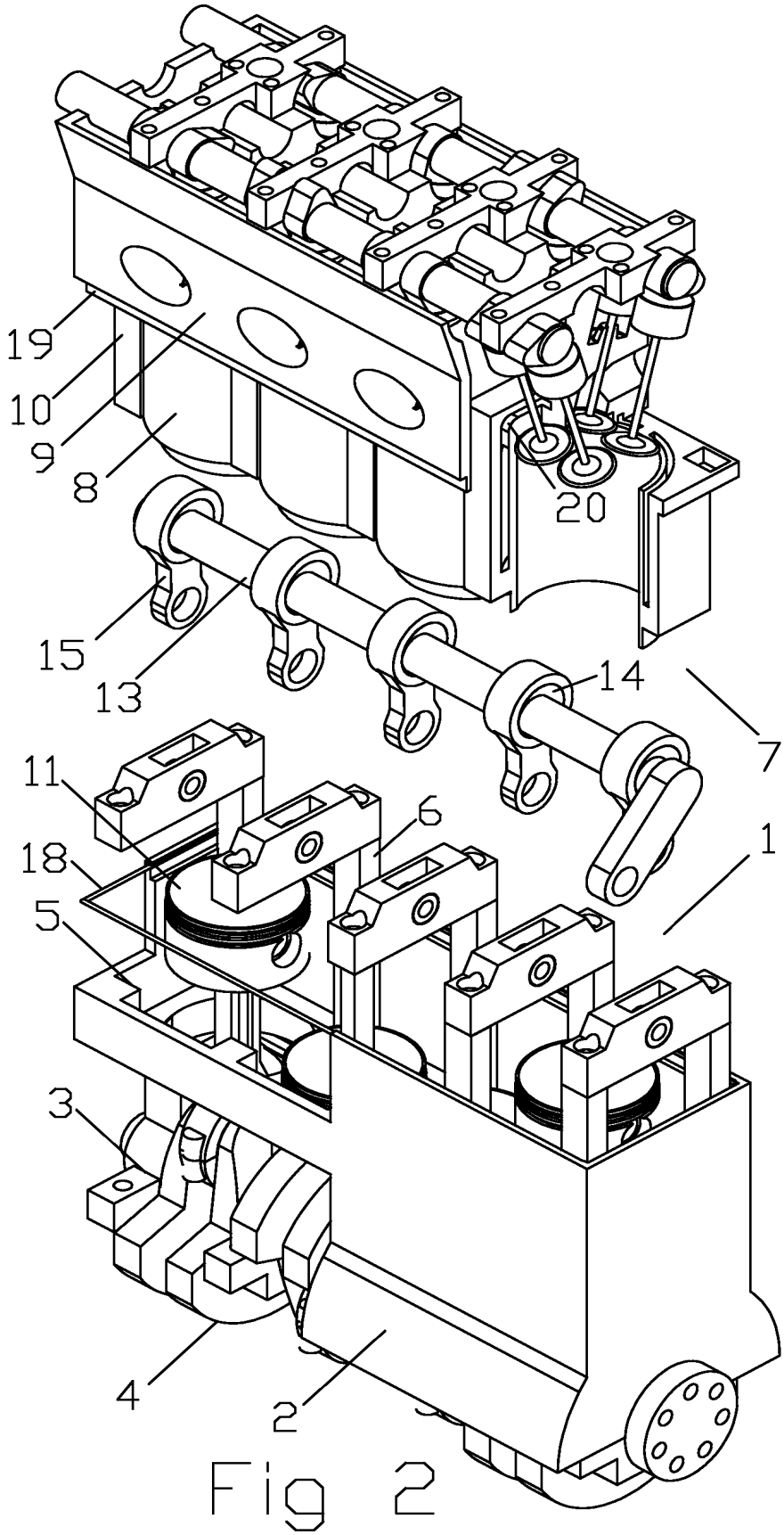

Fig 2

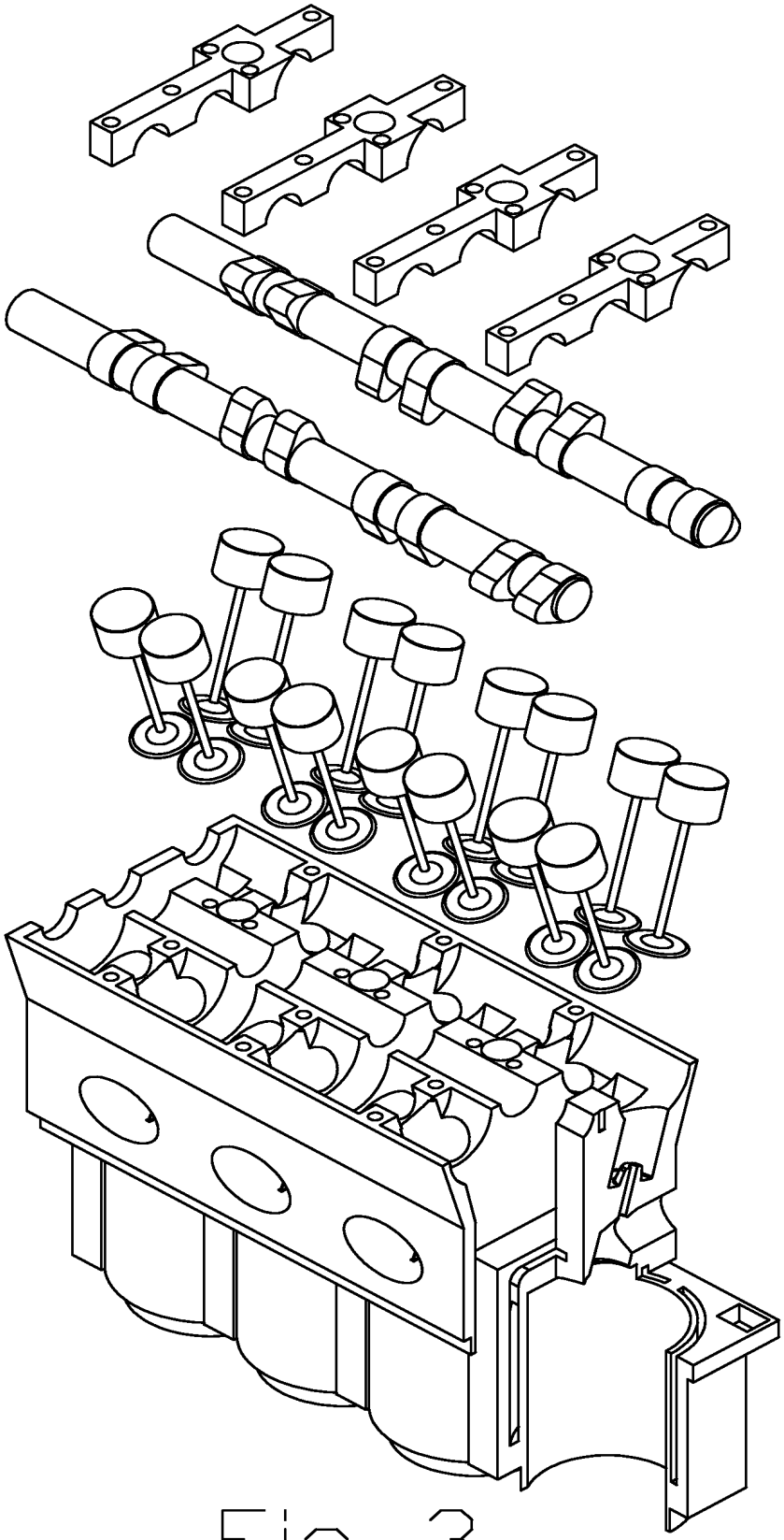

Fig 3

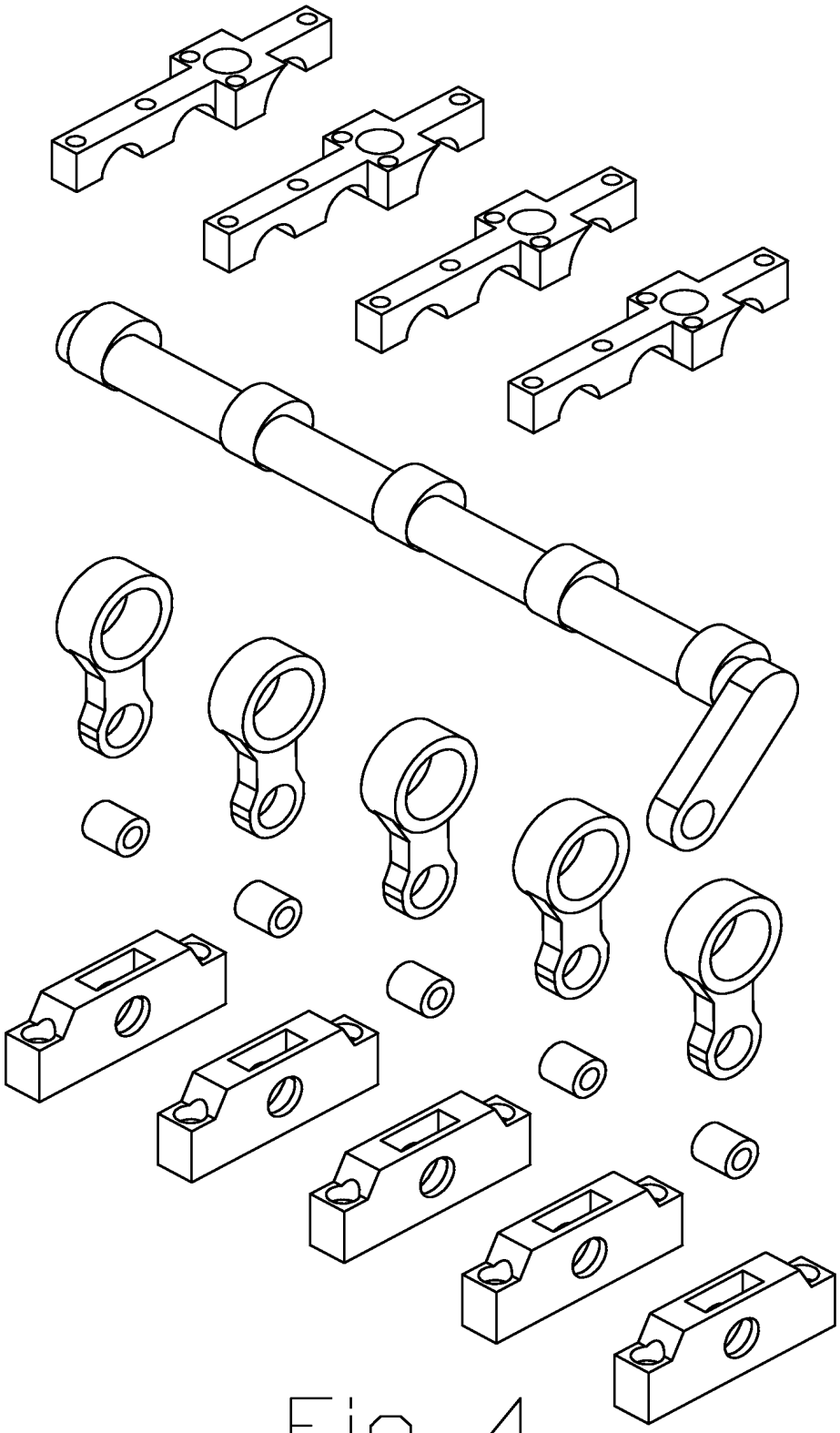

Fig 4

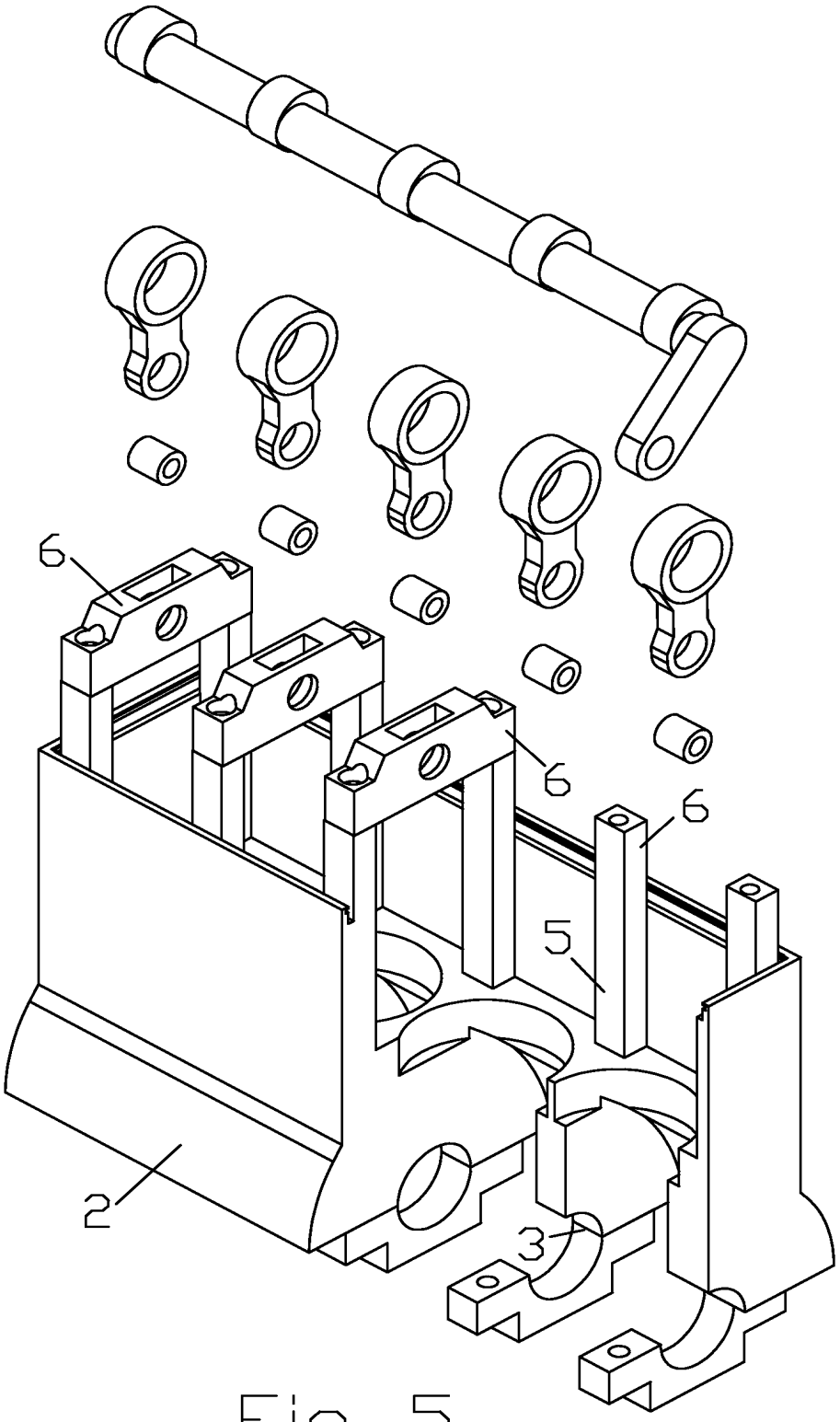

Fig 5

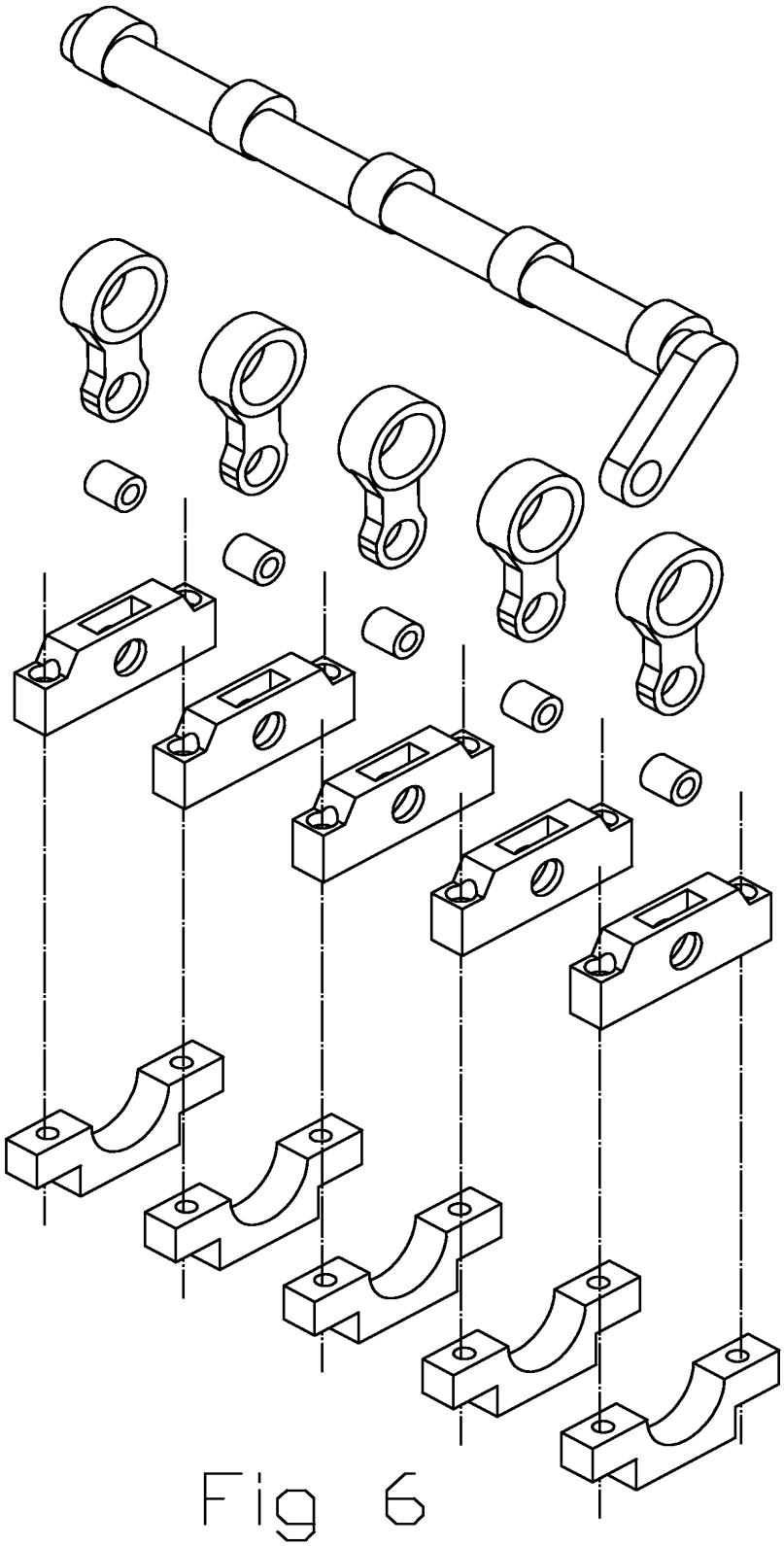

Fig 6

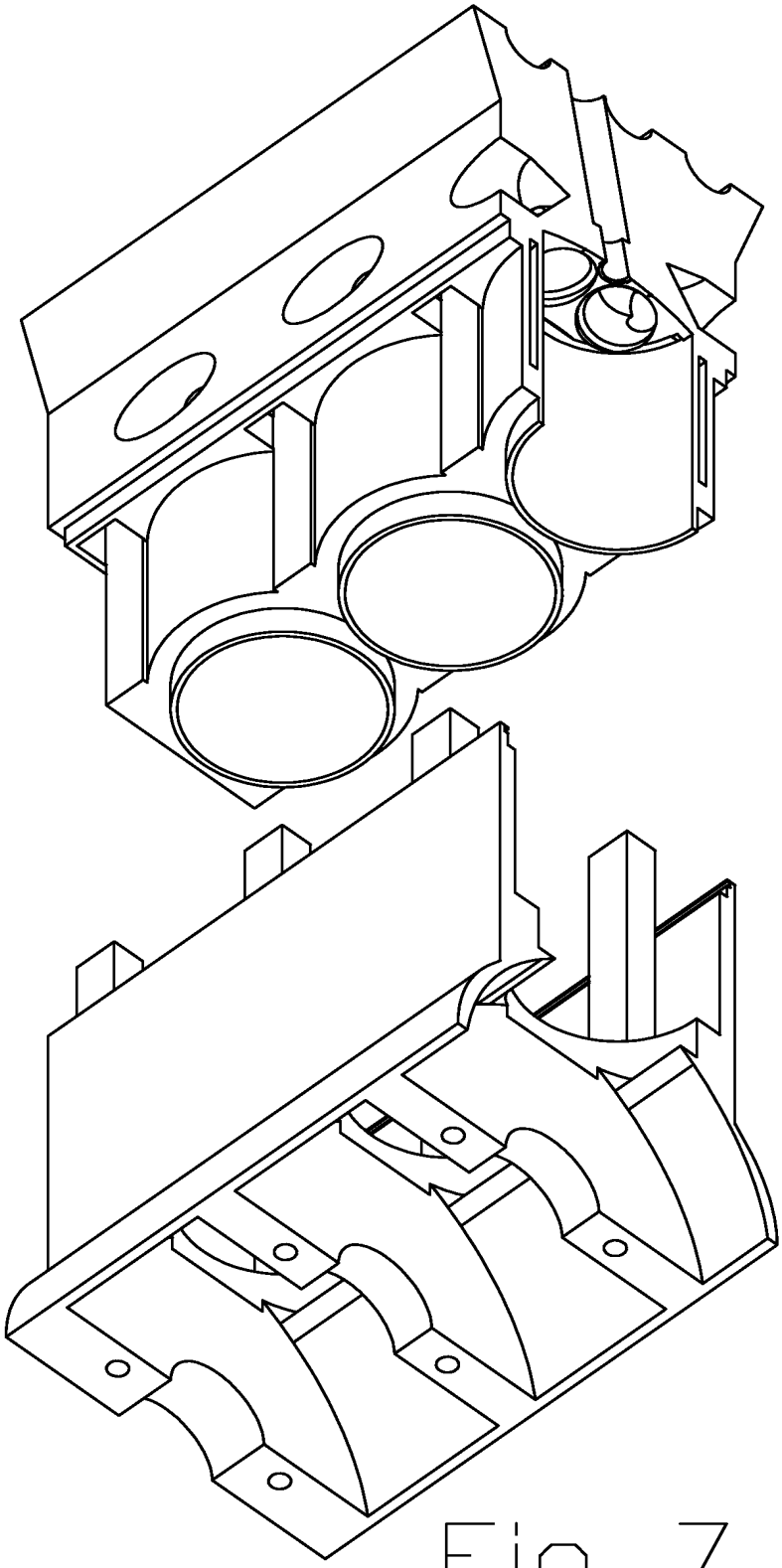

Fig 7

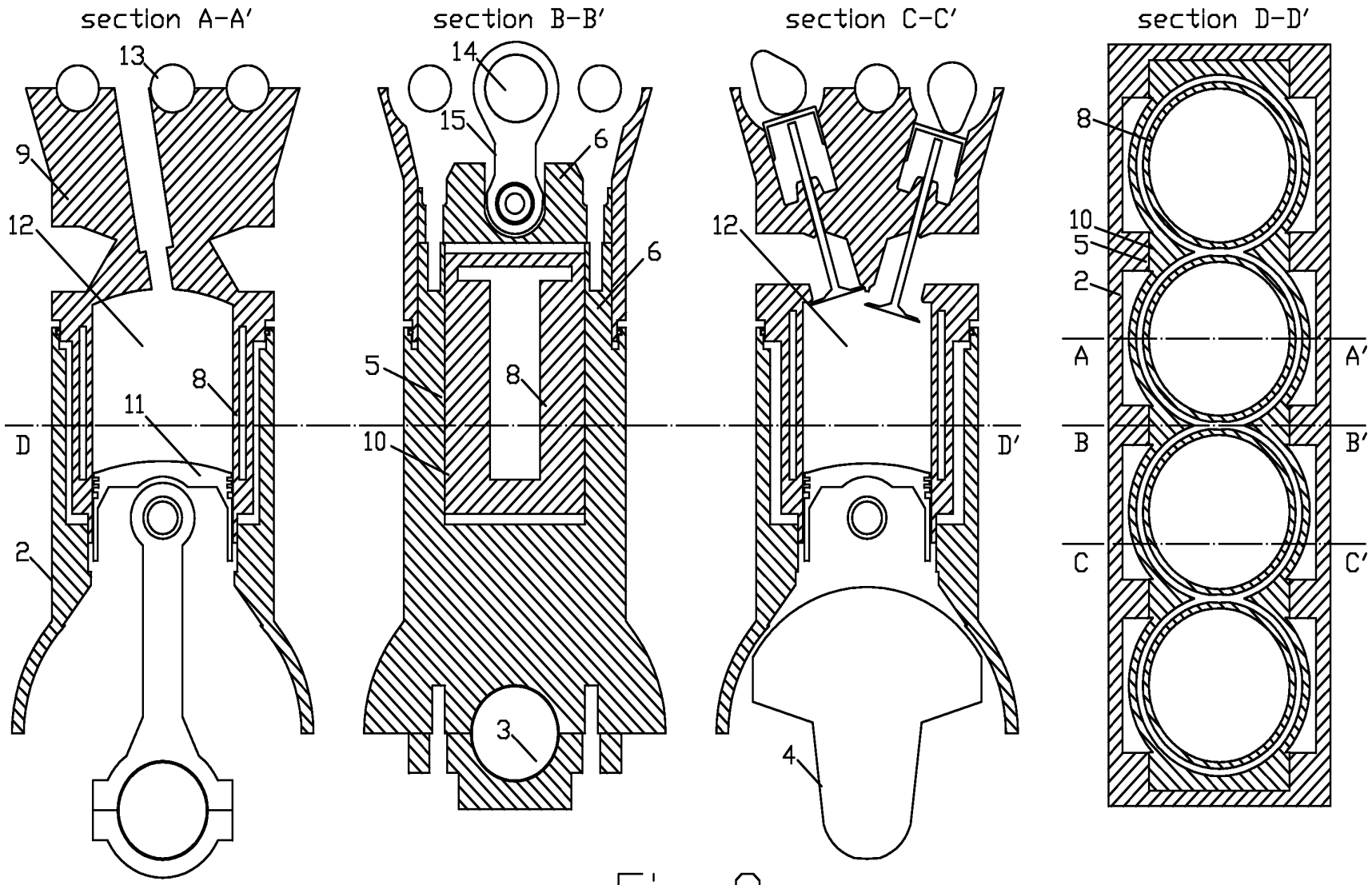
section A-A'
section B-B'
section C-C'
section D-D'
13
9
12
8
11
D
2
14
15
6
6
5
8
10
3
12
D'
4
8
10
5
2
A
A'
B
B'
C
C'

Fig 8

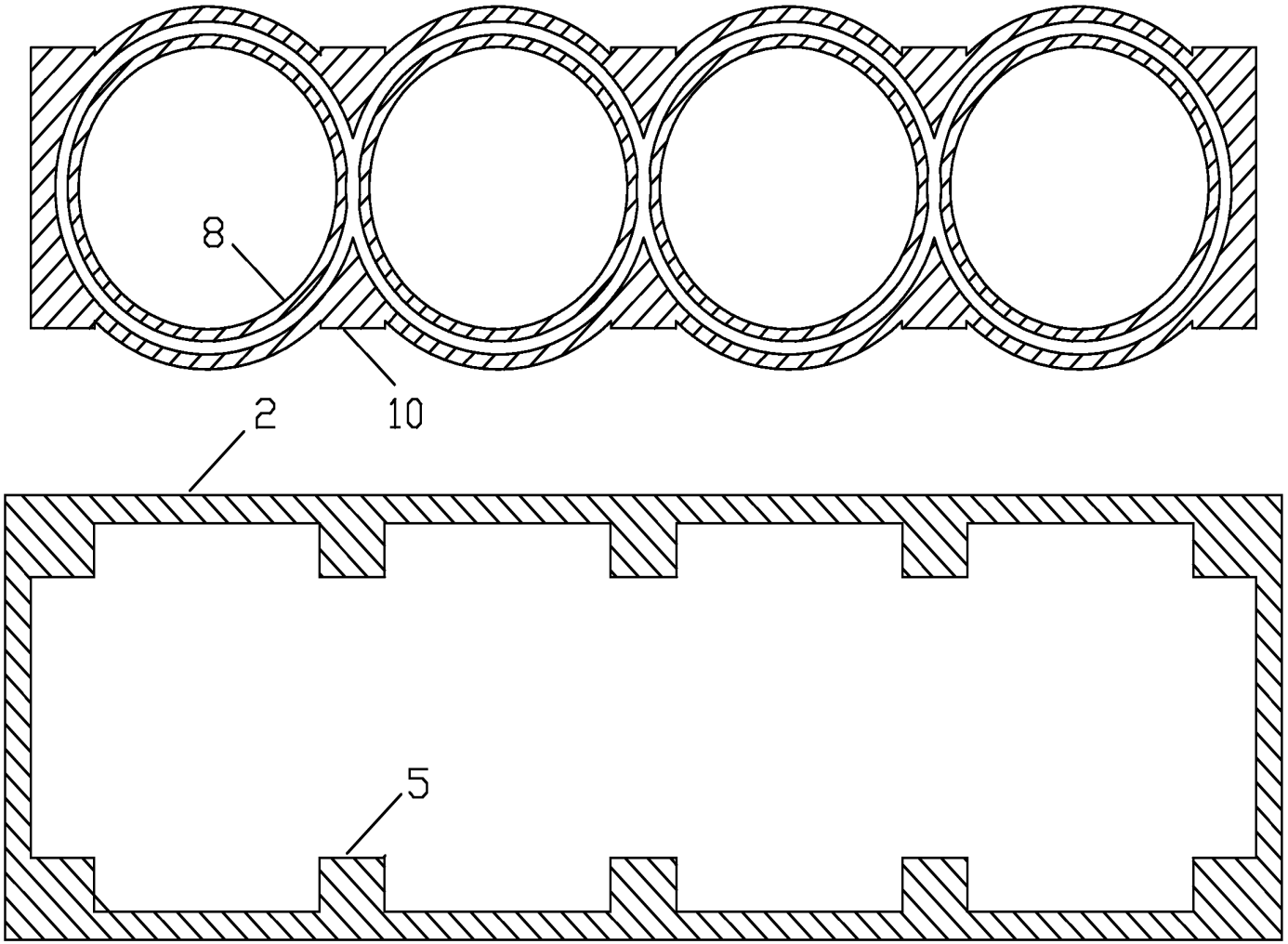

Fig 9

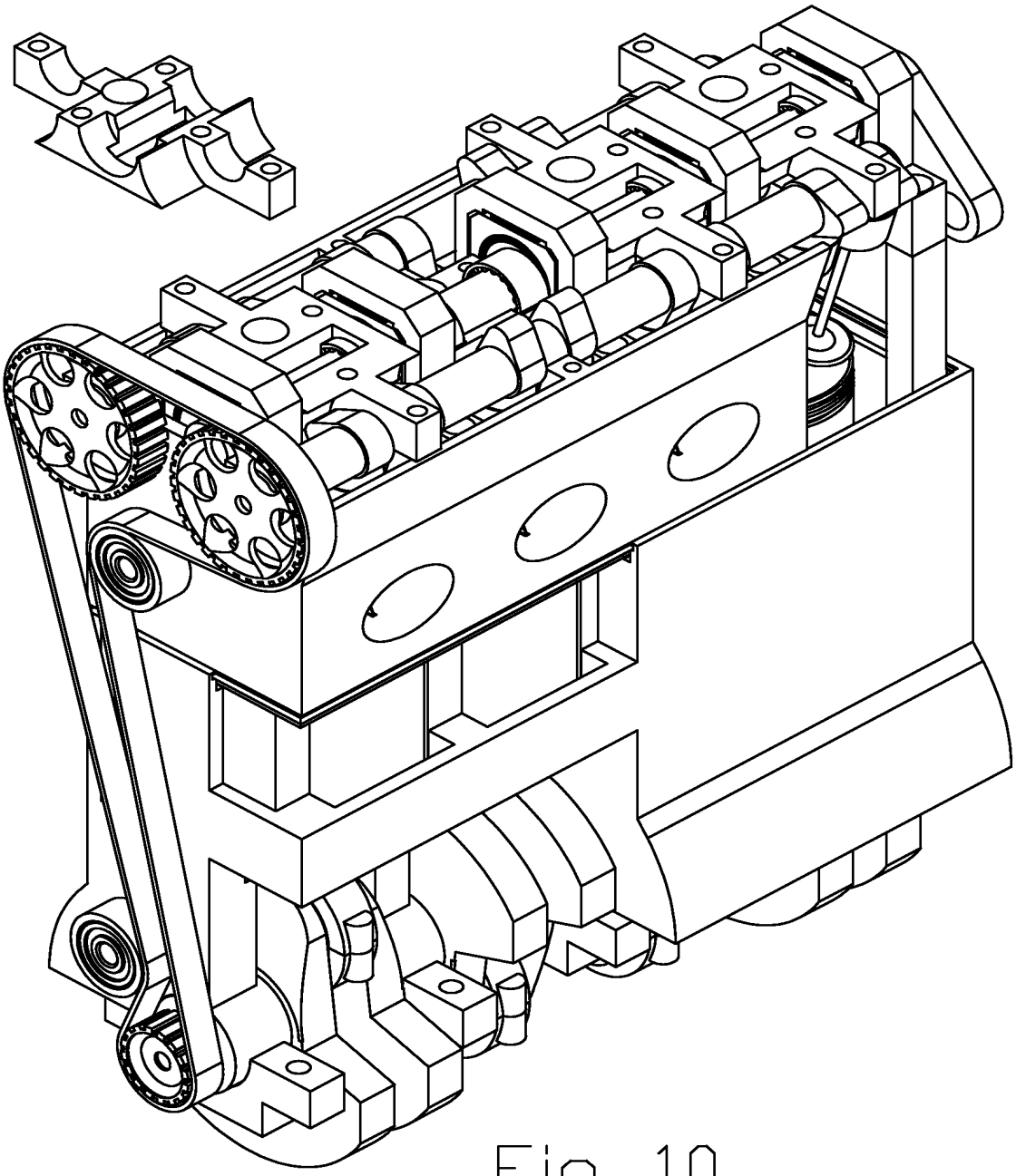

Fig 10

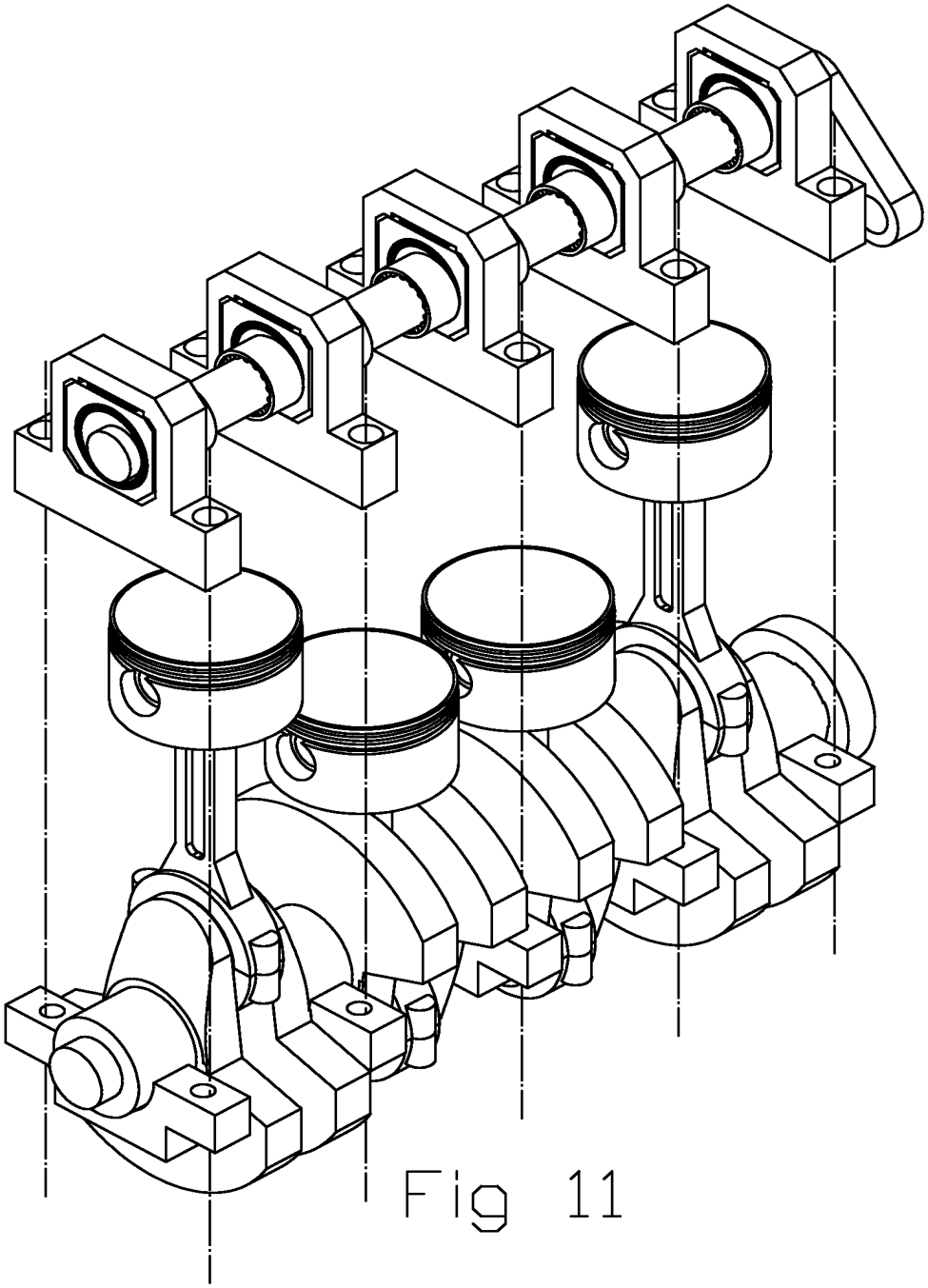

Fig 11

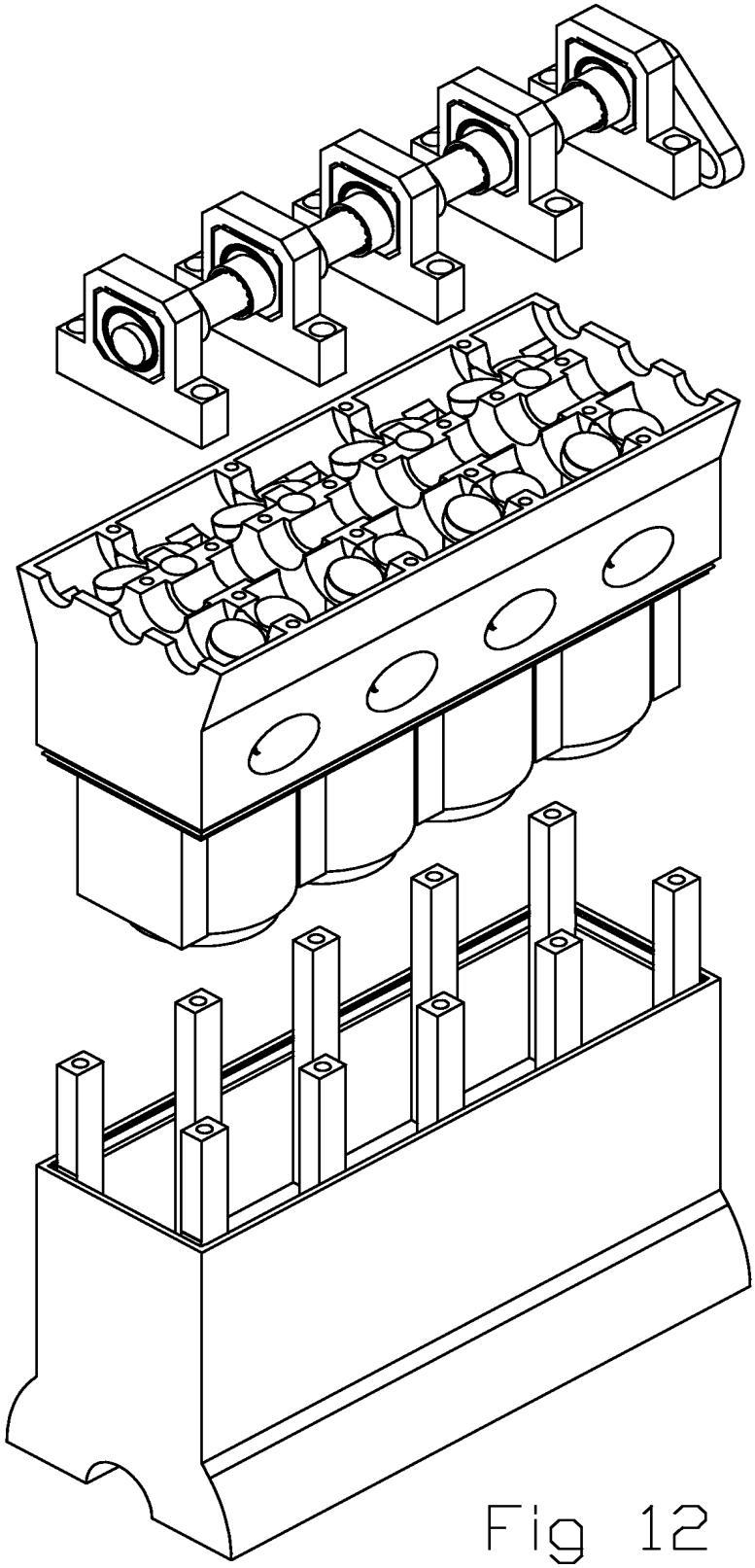

Fig 12

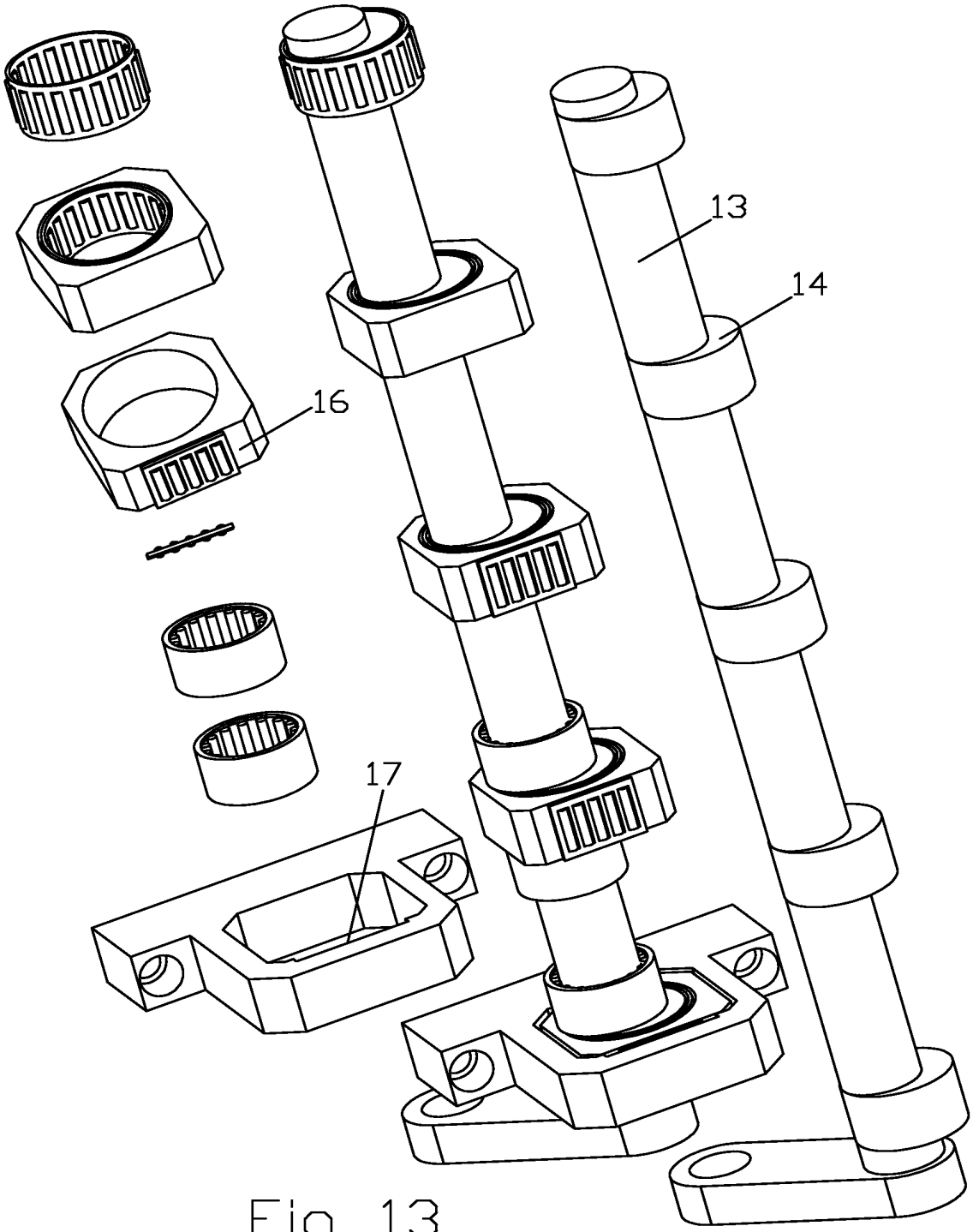

Fig 13

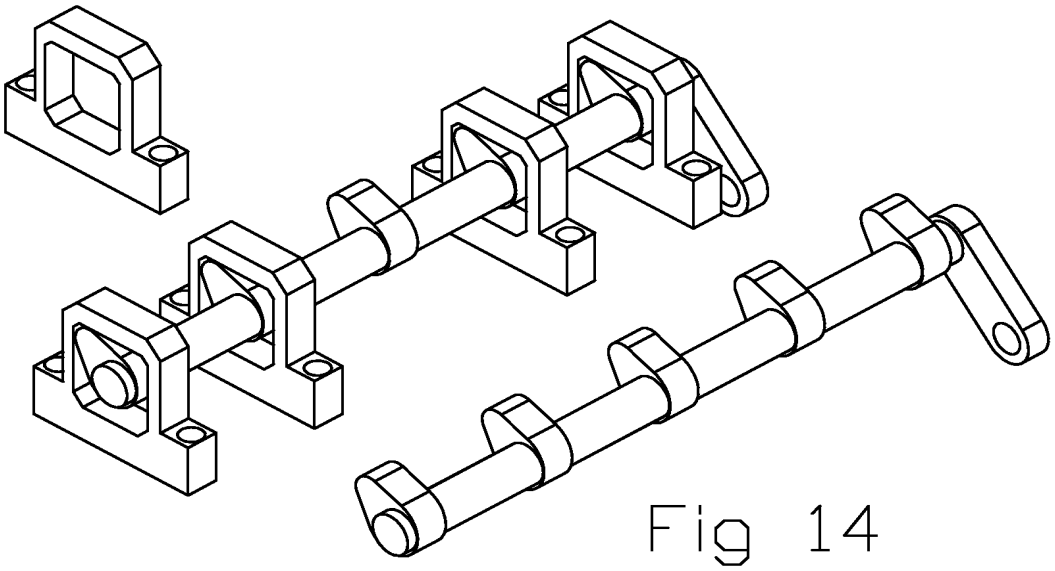

Fig 14

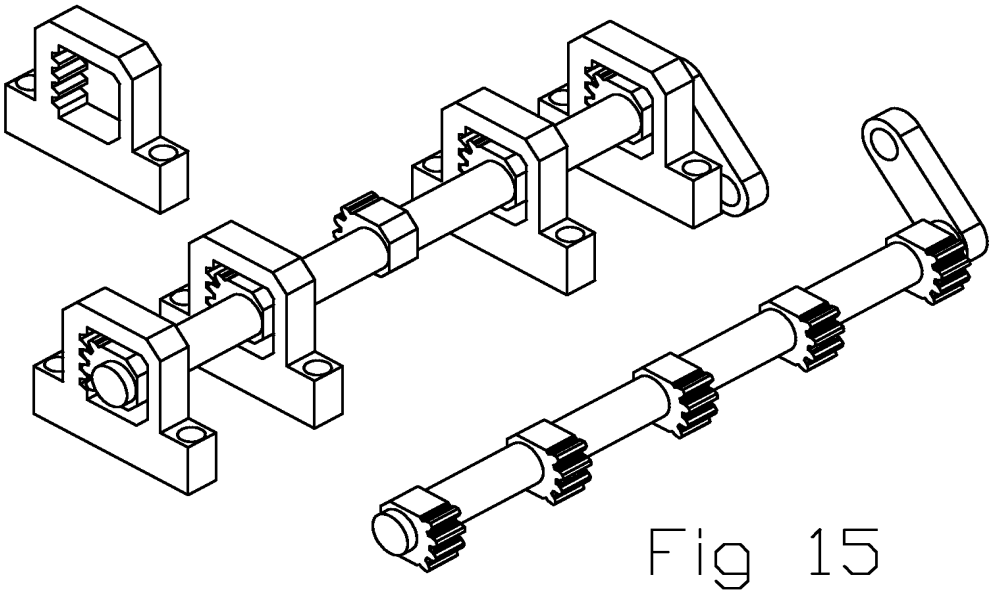

Fig 15

Electronic Patent Application Fee Transmittal

Application Number:	
Filing Date:	
Title of Invention:	VARIABLE COMPRESSION RATIO ENGINE
First Named Inventor/Applicant Name:	Manousos Pattakos
Filer:	Manousos Pattakos
Attorney Docket Number:	

Filed as Small Entity

Utility under 35 USC 111(a) Filing Fees

Description	Fee Code	Quantity	Amount	Sub-Total in USD($)
Basic Filing:				
Utility filing Fee (Electronic filing)	4011	1	82	82
Utility Search Fee	2111	1	270	270
Utility Examination Fee	2311	1	110	110
Pages:				
Claims:				
Miscellaneous-Filing:				
Petition:				
Patent-Appeals-and-Interference:				

Description	Fee Code	Quantity	Amount	Sub-Total in USD($)
Post-Allowance-and-Post-Issuance:				
Extension-of-Time:				
Miscellaneous:				
			Total in USD ($)	**462**

Electronic Acknowledgement Receipt

EFS ID:	4968995
Application Number:	12404355
International Application Number:	
Confirmation Number:	1641
Title of Invention:	VARIABLE COMPRESSION RATIO ENGINE
First Named Inventor/Applicant Name:	Manousos Pattakos
Correspondence Address:	Manousos Pattakos - Lampraki 406 - Nikea Piraeus - 18452 GR 0302104934402 manousos.pattakos@pattakon.com
Filer:	Manousos Pattakos
Filer Authorized By:	
Attorney Docket Number:	
Receipt Date:	16-MAR-2009
Filing Date:	
Time Stamp:	05:23:04
Application Type:	Utility under 35 USC 111(a)

Payment information:

Submitted with Payment	yes
Payment Type	Credit Card
Payment was successfully received in RAM	$462

RAM confirmation Number	5768
Deposit Account	
Authorized User	

File Listing:

Document Number	Document Description	File Name	File Size(Bytes)/ Message Digest	Multi Part /.zip	Pages (if appl.)
1	Oath or Declaration filed	Declarations_Fees.pdf	1497468 6e5ed6c7771389194de9763dfffb3aecc524b3f5	no	4
Warnings:					
Information:					
2	Specification	VCR_Description_Claims_Abstract.pdf	25735 02cb00bc6be6e39df1bd225e6d7a77bf7c81f64e	no	10
Warnings:					
Information:					
3	Drawings-only black and white line drawings	VCR_drawings.pdf	564726 d4827e56c4b21ce18c8ed91051a347a518818897	no	14
Warnings:					
Information:					
4	Fee Worksheet (PTO-06)	fee-info.pdf	32658 e54f9db1b840f342629bc3678ec6dc854acf0c7b	no	2
Warnings:					
Information:					
			Total Files Size (in bytes):	2120587	

This Acknowledgement Receipt evidences receipt on the noted date by the USPTO of the indicated documents, characterized by the applicant, and including page counts, where applicable. It serves as evidence of receipt similar to a Post Card, as described in MPEP 503.

<u>New Applications Under 35 U.S.C. 111</u>
If a new application is being filed and the application includes the necessary components for a filing date (see 37 CFR 1.53(b)-(d) and MPEP 506), a Filing Receipt (37 CFR 1.54) will be issued in due course and the date shown on this Acknowledgement Receipt will establish the filing date of the application.

<u>National Stage of an International Application under 35 U.S.C. 371</u>
If a timely submission to enter the national stage of an international application is compliant with the conditions of 35 U.S.C. 371 and other applicable requirements a Form PCT/DO/EO/903 indicating acceptance of the application as a national stage submission under 35 U.S.C. 371 will be issued in addition to the Filing Receipt, in due course.

<u>New International Application Filed with the USPTO as a Receiving Office</u>
If a new international application is being filed and the international application includes the necessary components for an international filing date (see PCT Article 11 and MPEP 1810), a Notification of the International Application Number and of the International Filing Date (Form PCT/RO/105) will be issued in due course, subject to prescriptions concerning national security, and the date shown on this Acknowledgement Receipt will establish the international filing date of the application.

PTO/SB/17 (10-08)
Approved for use through 06/30/2010. OMB 0651-0032
U.S. Patent and Trademark Office; U.S. DEPARTMENT OF COMMERCE

Effective on 12/08/2004.
Fees pursuant to the Consolidated Appropriations Act, 2005 (H.R. 4818).

FEE TRANSMITTAL
For FY 2009

☑ Applicant claims small entity status. See 37 CFR 1.27

TOTAL AMOUNT OF PAYMENT ($)

Complete if Known	
Application Number	
Filing Date	March 16, 2009
First Named Inventor	PATTAKOS Manousos
Examiner Name	
Art Unit	
Attorney Docket No.	

METHOD OF PAYMENT (check all that apply)

☐ Check ☑ Credit Card ☐ Money Order ☐ None ☐ Other (please identify): _____

☐ Deposit Account Deposit Account Number: _____ Deposit Account Name: _____

For the above-identified deposit account, the Director is hereby authorized to: (check all that apply)

☐ Charge fee(s) indicated below ☐ Charge fee(s) indicated below, **except for the filing fee**

☐ Charge any additional fee(s) or underpayments of fee(s) under 37 CFR 1.16 and 1.17 ☐ Credit any overpayments

WARNING: Information on this form may become public. Credit card information should not be included on this form. Provide credit card information and authorization on PTO-2038.

FEE CALCULATION

1. BASIC FILING, SEARCH, AND EXAMINATION FEES

Application Type	FILING FEES Fee ($)	FILING FEES Small Entity Fee ($)	SEARCH FEES Fee ($)	SEARCH FEES Small Entity Fee ($)	EXAMINATION FEES Fee ($)	EXAMINATION FEES Small Entity Fee ($)	Fees Paid ($)
Utility	330	165	540	270	220	110	545
Design	220	110	100	50	140	70	
Plant	220	110	330	165	170	85	
Reissue	330	165	540	270	650	325	
Provisional	220	110	0	0	0	0	

2. EXCESS CLAIM FEES

Fee Description	Fee ($)	Small Entity Fee ($)
Each claim over 20 (including Reissues)	52	26
Each independent claim over 3 (including Reissues)	220	110
Multiple dependent claims	390	195

Multiple Dependent Claims Fee ($)	Fee Paid ($)
	0

Total Claims		Extra Claims	Fee ($)	Fee Paid ($)
10	- 20 or HP =	0	x _____ =	0

HP = highest number of total claims paid for, if greater than 20.

Indep. Claims		Extra Claims	Fee ($)	Fee Paid ($)
3	- 3 or HP =	0	x _____ =	0

HP = highest number of independent claims paid for, if greater than 3.

3. APPLICATION SIZE FEE

If the specification and drawings exceed 100 sheets of paper (excluding electronically filed sequence or computer listings under 37 CFR 1.52(e)), the application size fee due is $270 ($135 for small entity) for each additional 50 sheets or fraction thereof. See 35 U.S.C. 41(a)(1)(G) and 37 CFR 1.16(s).

Total Sheets		Extra Sheets		Number of each additional 50 or fraction thereof		Fee ($)	Fee Paid ($)
24	- 100 =	0	/ 50 =	0 (round up to a whole number)	x	0	= 0

4. OTHER FEE(S) Fees Paid ($)

Non-English Specification, $130 fee (no small entity discount) _____

Other (e.g., late filing surcharge): _____ _____

SUBMITTED BY

Signature		Registration No. (Attorney/Agent)	Telephone 030-210-4934402
Name (Print/Type)	PATTAKOS Manousos		Date March 16, 2009

PTO/SB/01 (10-05)
Approved for use through 07/31/2006. OMB 0651-0032
U.S. Patent and Trademark Office; U.S. DEPARTMENT OF COMMERCE

DECLARATION FOR UTILITY OR DESIGN PATENT APPLICATION (37 CFR 1.63)

☑ Declaration Submitted With Initial Filing *OR* ☐ Declaration Submitted after Initial Filing (surcharge (37 CFR 1.16 (e)) required)

Attorney Docket Number	
First Named Inventor	**PATTAKOS Manousos**
COMPLETE IF KNOWN	
Application Number	
Filing Date	**March 16, 2009**
Art Unit	
Examiner Name	

I hereby declare that:

Each inventor's residence, mailing address, and citizenship are as stated below next to their name.

I believe the inventor(s) named below to be the original and first inventor(s) of the subject matter which is claimed and for which a patent is sought on the invention entitled:

VARIABLE COMPRESSION RATIO ENGINE

(Title of the Invention)

the specification of which

☑ is attached hereto

OR

☐ was filed on (MM/DD/YYYY) ☐ as United States Application Number or PCT International Application Number ☐ and was amended on (MM/DD/YYYY) ☐ (if applicable).

I hereby state that I have reviewed and understand the contents of the above identified specification, including the claims, as amended by any amendment specifically referred to above.

I acknowledge the duty to disclose information which is material to patentability as defined in 37 CFR 1.56, including for continuation-in-part applications, material information which became available between the filing date of the prior application and the national or PCT international filing date of the continuation-in-part application.

I hereby claim foreign priority benefits under 35 U.S.C. 119(a)-(d) or (f), or 365(b) of any foreign application(s) for patent, inventor's or plant breeder's rights certificate(s), or 365(a) of any PCT international application which designated at least one country other than the United States of America, listed below and have also identified below, by checking the box, any foreign application for patent, inventor's or plant breeder's rights certificate(s), or any PCT international application having a filing date before that of the application on which priority is claimed.

Prior Foreign Application Number(s)	Country	Foreign Filing Date (MM/DD/YYYY)	Priority Not Claimed	Certified Copy Attached? YES	NO
			☐	☐	☐
			☐	☐	☐
			☐	☐	☐
			☐	☐	☐

☐ Additional foreign application numbers are listed on a supplemental priority data sheet PTO/SB/02B attached hereto.

PTO/SB/01 (10-05)
Approved for use through 07/31/2006. OMB 0651-0032
U.S. Patent and Trademark Office; U.S. DEPARTMENT OF COMMERCE

DECLARATION — Utility or Design Patent Application

Direct all correspondence to: ☐ The address associated with Customer Number: [ ] OR ☑ Correspondence address below

Name **Manousos Pattakos**

Address **Lampraki 406, PC 18452 GR, Nikea Piraeus, Greece**

City	State	ZIP
Nikea Piraeus		**18452**

Country	Telephone	Email
Greece	**030-210-4934402**	**manousos.pattakos@pattakon.com**

WARNING:

Petitioner/applicant is cautioned to avoid submitting personal information in documents filed in a patent application that may contribute to identity theft. Personal information such as social security numbers, bank account numbers, or credit card numbers (other than a check or credit card authorization form PTO-2038 submitted for payment purposes) is never required by the USPTO to support a petition or an application. If this type of personal information is included in documents submitted to the USPTO, petitioners/applicants should consider redacting such personal information from the documents before submitting them to the USPTO. Petitioner/applicant is advised that the record of a patent application is available to the public after publication of the application (unless a non-publication request in compliance with 37 CFR 1.213(a) is made in the application) or issuance of a patent. Furthermore, the record from an abandoned application may also be available to the public if the application is referenced in a published application or an issued patent (see 37 CFR 1.14). Checks and credit card authorization forms PTO-2038 submitted for payment purposes are not retained in the application file and therefore are not publicly available.

I hereby declare that all statements made herein of my own knowledge are true and that all statements made on information and belief are believed to be true; and further that these statements were made with the knowledge that willful false statements and the like so made are punishable by fine or imprisonment, or both, under 18 U.S.C. 1001 and that such willful false statements may jeopardize the validity of the application or any patent issued thereon.

NAME OF SOLE OR FIRST INVENTOR: ☐ A petition has been filed for this unsigned inventor

Given Name (first and middle [if any])	Family Name or Surname
Manousos	**Pattakos**

Inventor's Signature	Date
	March 16, 2009

Residence: City	State	Country	Citizenship
Nikea Piraeus		**Greece**	**Greek**

Mailing Address
Lampraki 406, PC18452, Nikea Piraeus, Greece

City	State	Zip	Country
Nikea Piraeus		**18452**	**Greece**

☑ Additional inventors or a legal representative are being named on the **1** supplemental sheet(s) PTO/SB/02A or 02LR attached hereto.

PTO/SB/02A (07-07)
Approved for use through 06/30/2010. OMB 0651-0032
U.S. Patent and Trademark Office: U.S. DEPARTMENT OF COMMERCE

DECLARATION

ADDITIONAL INVENTOR(S)
Supplemental Sheet

Name of Additional Joint Inventor, if any:	☐ A petition has been filed for this unsigned inventor		
Given Name (first and middle (if any))	Family Name or Surname		
Chrysavgi	**Pattakou**		
Inventor's Signature			**March 16, 2009** Date
Aharnai Athens Residence: City	State	**Greece** Country	**Greek** Citizenship
Xenofontos 20, 13674GR, Aharnai, Athens Mailing Address			
Aharnai Athens City	State	**13674** Zip	**Greece** Country
Name of Additional Joint Inventor, if any:	☐ A petition has been filed for this unsigned inventor		
Given Name (first and middle (if any))	Family Name or Surname		
Emmanouel	**Pattakos**		
Inventor's Signature			Date
Nikea Piraeus Residence: City	State	**Greece** Country	**Greek** Citizenship
Lampraki 406, PC 18452 GR, Nikea Piraeus, Greece Mailing Address			
Nikea Piraeus City	State	**18452** Zip	**Greece** Country
Name of Additional Joint Inventor, if any:	☐ A petition has been filed for this unsigned inventor		
Given Name (first and middle (if any))	Family Name or Surname		
Inventor's Signature			Date
Residence: City	State	Country	Citizenship
Mailing Address			
City	State	Zip	Country

Filing Date: 03/16/09

Approved for use through 7/31/2006. OMB 0651-0032
U.S. Patent and Trademark Office; U.S. DEPARTMENT OF COMMERCE

PATENT APPLICATION FEE DETERMINATION RECORD

Substitute for Form PTO-875

Application or Docket Number: 12/404,355

APPLICATION AS FILED – PART I

FOR	(Column 1) NUMBER FILED	(Column 2) NUMBER EXTRA	SMALL ENTITY RATE ($)	SMALL ENTITY FEE ($)	OR	OTHER THAN SMALL ENTITY RATE ($)	OTHER THAN SMALL ENTITY FEE ($)
BASIC FEE (37 CFR 1.16(a), (b), or (c))	N/A	N/A	N/A	82		N/A	
SEARCH FEE (37 CFR 1.16(k), (i), or (m))	N/A	N/A	N/A	270		N/A	
EXAMINATION FEE (37 CFR 1.16(o), (p), or (q))	N/A	N/A	N/A	110		N/A	
TOTAL CLAIMS (37 CFR 1.16(i))	10 minus 20 =		x$26		OR	x$52	
INDEPENDENT CLAIMS (37 CFR 1.16(h))	3 minus 3 =	*	x$110			x$220	
APPLICATION SIZE FEE (37 CFR 1.16(s))	If the specification and drawings exceed 100 sheets of paper, the application size fee due is $260 ($130 for small entity) for each additional 50 sheets or fraction thereof. See 35 U.S.C. 41(a)(1)(G) and 37 CFR						
MULTIPLE DEPENDENT CLAIM PRESENT (37 CFR 1.16(j))			195			390	
			TOTAL	462		TOTAL	

* If the difference in column 1 is less than zero, enter "0" in column 2.

APPLICATION AS AMENDED – PART II

		(Column 1) CLAIMS REMAINING AFTER AMENDMENT		(Column 2) HIGHEST NUMBER PREVIOUSLY PAID FOR	(Column 3) PRESENT EXTRA	SMALL ENTITY RATE ($)	SMALL ENTITY ADDI-TIONAL FEE ($)	OR	OTHER THAN SMALL ENTITY RATE ($)	OTHER THAN SMALL ENTITY ADDI-TIONAL FEE ($)
AMENDMENT A	Total (37 CFR 1.16(i))	*	Minus	**	=	x =		OR	x =	
	Independent (37 CFR 1.16(h))	*	Minus	***	=	x =		OR	x =	
	Application Size Fee (37 CFR 1.16(s))									
	FIRST PRESENTATION OF MULTIPLE DEPENDENT CLAIM (37 CFR 1.16(j))					N/A		OR	N/A	
						TOTAL ADD'T FEE		OR	TOTAL ADD'T FEE	

		(Column 1) CLAIMS REMAINING AFTER AMENDMENT		(Column 2) HIGHEST NUMBER PREVIOUSLY PAID FOR	(Column 3) PRESENT EXTRA	SMALL ENTITY RATE ($)	SMALL ENTITY ADDI-TIONAL FEE ($)	OR	OTHER THAN SMALL ENTITY RATE ($)	OTHER THAN SMALL ENTITY ADDI-TIONAL FEE ($)
AMENDMENT B	Total (37 CFR 1.16(i))	*	Minus	**	=	x =		OR	x =	
	Independent (37 CFR 1.16(h))	*	Minus	***	=	x =		OR	x =	
	Application Size Fee (37 CFR 1.16(s))									
	FIRST PRESENTATION OF MULTIPLE DEPENDENT CLAIM (37 CFR 1.16(j))					N/A		OR	N/A	
						TOTAL ADD'T FEE		OR	TOTAL ADD'T FEE	

* If the entry in column 1 is less than the entry in column 2, write "0" in column 3.
** If the "Highest Number Previously Paid For" IN THIS SPACE is less than 20, enter "20".
*** If the "Highest Number Previously Paid For" IN THIS SPACE is less than 3, enter "3".
The "Highest Number Previously Paid For" (Total or Independent) is the highest number found in the appropriate box in column 1.